Available online at www.sciencedirect.com
ScienceDirect
Tunnelling and Underground Space Technology 23 (2008) 399–420
Tunnelling and Underground Space Technology
incorporating Trenchless Technology Research
www.elsevier.com/locate/tust

Full 3D modelling for effects of tunnelling on existing support systems in the Sydney region

H.Y. Liu [a,*], J.C. Small [a], J.P. Carter [b]

[a] *School of Civil Engineering, The University of Sydney, NSW 2006, Australia*
[b] *Pro-Vice-Chancellor, The University of Newcastle, NSW 2308, Australia*

Received 6 February 2007; received in revised form 12 June 2007; accepted 28 June 2007
Available online 13 August 2007

Abstract

The assessment of the interaction between a new tunnel and existing structures is an important issue in urban areas. In this study, the effect of tunnelling on the existing support system (i.e. shotcrete lining and rock bolts) of an adjacent tunnel is firstly investigated using ABAQUS and TUNNEL3D through full three-dimensional (3D) finite element calculations coupled with elasto-plastic material models, which takes into account the tunnelling procedure, the interaction between the shotcrete lining and rock mass, the interaction between the rock bolts and rock mass, and the elasto-plastic behaviour of the rock mass, the shotcrete lining and the rock bolts. Then, on the basis of the calculated results, it is concluded that the driving of the new tunnel significantly affects the existing support system when the advancing tunnel face passes the existing support system and is minor when the face is far from it. Moreover, the support system in the side of the existing tunnel closest to the new tunnel is more significantly affected than that on the side opposite to the new tunnel. It is also found that in a region such as Sydney with relatively high horizontal regional stresses, the driving of the new tunnel will not cause considerable adverse effects on the existing support system, if the new tunnel is driven horizontally parallel to the existing tunnel with a sufficient separation, since both the tensile stress in the existing shotcrete lining in the lateral sides of the preceding tunnel and the compressive stress at the crown decrease although noticeable tensile stress increments are observed on some parts of the existing rock bolts. Finally, it is pointed out that the effects of tunnelling on the existing support system strongly depend on the position between the original and new tunnels. In terms of the stress increments on the existing support system, especially the maximum tensile stress increments on the existing shotcrete lining, the driving of the new tunnel causes increasingly adverse effects on the existing support system in a sequence of: (i) horizontally parallel tunnels with a separation of 30 m; (ii) horizontally parallel tunnels with a separation of 20 m; (iii) staggered tunnels with a separation of 30 m; (iv) vertically alignment tunnels; and (v) staggered tunnels with a separation of 20 m in the cases investigated in this study. For the relatively high regional stresses in the Sydney region, the obtained results qualitatively agree with other's published observations from the construction of closely parallel subway tunnels.

Keywords: Interaction; Tunnelling; Shotcrete lining; Rock bolts; 3D modelling; FEM

1. Introduction

The growth of many cities has resulted in the need for increased infrastructure. As urban spaces become more limited, underground facilities such as tunnels are becoming more and more efficient in providing the required infrastructure such as mass rapid transit systems (both rail and road), sewerage, power transmission tunnels, communication and other subsurface lifelines. As a result, close positioning of tunnels, and particularly the construction of new tunnels in close proximity to existing structures such as tunnels and their support systems becomes indispensable in congested urban areas. This may be done to increase design freedoms or to make tunnel construction more economical. In such cases, it is essential to protect the adjacent tunnels as well as their existing support systems, and to

* Corresponding author. Tel.: +61 2 9351 2129; fax: +61 2 9351 3343.
E-mail address: Hongyuan.Liu@civil.usyd.edu.au (H.Y. Liu).

0886-7798/$ - see front matter © 2007 Elsevier Ltd. All rights reserved.
doi:10.1016/j.tust.2007.06.009

control the construction of the new tunnel in order not to cause adverse effects on them since the construction of the new tunnels leads inevitably to ground displacements and deformations, which may affect the adjacent tunnel and its existing support system and lead to unacceptable damage. Thus, the prediction of the effect of tunnelling on the adjacent tunnel and its existing support system becomes an important issue in the planning, designing and constructing processes of new tunnels.

Several approaches, namely, empirical methods, analytical methods and numerical methods are commonly used for the predictions of ground movements and settlements associated with tunnelling.

In engineering practices, empirical methods are generally used to predict tunnelling-induced ground movements. Peck (1969) stated that the transverse settlement trough caused by a tunnel could be described by a Gaussian error function. This mathematical description has been widely accepted (Attewell and Woodman, 1982; O'Reilly and New, 1982) since then, although it has no theoretical basis. However, as pointed out by Loganathan and Poulos (1998), empirical methods are subjected to some importation limitations in their applicability to different ground conditions and construction techniques, and in the limited information they provide about the horizontal movements and subsurface settlements. A few attempts (Sagaseta, 1987; Loganathan and Poulos, 1998; Chen et al., 1999) have been made to develop closed form analytical solutions that incorporate all of the factors that may contribute to ground deformations.

However, empirical methods and analytical methods are restricted to 'free-field' (Chen et al., 1999) or 'green-field' (Franzius, 2003) situations (i.e. in the absence of any structures) and can not deal with problems involving the interaction between a tunnel and existing structures such as adjacent tunnels and their support systems. To analyse the interaction problem between a new tunnel and an existing one, numerical methods may provide a flexible tool.

According to the review conducted by Gioda and Swoboda (1999) on numerical methods used in tunnel engineering, the finite element method (FEM) is a well-recognised numerical tool that can be used to analyse tunnelling-induced ground movements because of its ability to take into account the heterogeneity of the ground, the nonlinear behaviour of rocks/soils, the complex geometry of tunnels, the rock/soil-structure interaction and the tunnelling method. Tunnelling is often modelled two-dimensionally (2D) although it is a three-dimensional (3D) problem since a full 3D numerical analysis often requires excessive computation resources (both storage and time). Various methods have been proposed to take account of the stress and strain changes ahead of the tunnel face when adopting 2D plane strain or axi-symmetrical analyses to simulate tunnel construction: the convergence-confinement method (Panet and Guenot, 1982; Bernat and Cambou, 1998; Yamaguchi et al., 1998; Asano et al., 2003), the progressive softening method (Swoboda, 1979; Carranza-Torres and Fairhurst, 2000; Curran et al., 2003; Karakus and Fowell, 2003, 2005), and the volume loss control method (Addenbrooke et al., 1997; Potts and Zdravkovic, 2001; Lin, 2004). Some of them touch on the interaction between adjacent tunnels. Yamaguchi et al. (1998) performed a series of 2D linear elastic finite element analyses to analyse ground behaviour during shield tunnel construction, the changes of earth pressures acting on parallel shield tunnels, and the influences of a shield thrusting on the preceding shield tunnel, which were compared with the monitored results during the construction of four extremely close parallel shield tunnels in Kyoto city, Japan. They concluded that a redistribution of the ground stress was caused by shield excavations when a succeeding shield was passing a preceding tunnel: (1) when the tunnels were positioned in vertical alignments, the vertical earth pressure on the existing tunnel decreases while the earth pressure on the lateral sides increases; (2) when tunnels were positioned in horizontal alignments, the ground pressure increases in all directions and the increase in the lateral pressure was particularly large. Asano et al. (2003) established a relationship between the wall displacement of a new tunnel and the incremental stress in the concrete lining in an existing tunnel using 2D FEM analysis at several cross-sections and proposed an observational excavation control method for adjacent mountain tunnels.

During the past few years, with the rapid development of computing power, interactive computer graphics, topological data structures and storage capacities, there has been some research (Tsuchiyama et al., 1988; Swoboda and Abu-Krisha, 1999; Augarde and Burd, 2001; Mroueh and Shahrour, 2002, 2003; Franzius, 2003; Galli et al., 2004) carried out on the 3D modelling of tunnel construction. Some of this research deals with tunnel–structure interaction. Tsuchiyama et al. (1988) analysed the deformation behaviour of the rock mass around an unsupported tunnel intersection in the construction of a new access tunnel to the existing main tunnel using 3D linear elastic FEM and found that the influence area along the main tunnel was of the order of one tunnel diameter on the obtuse angle side and about three times the tunnel diameter on the acute angle side from the point of intersection. Mroueh and Shahrour (2002) studied the impact of the construction of urban tunnels on adjacent pile foundations using an elasto-plastic 3D FEM. Their results indicated that tunnelling induced significant internal forces in adjacent piles and the distribution of the internal forces depended mainly on the position of the pile tip regarding the tunnel horizontal axis and the distance of the pile axis from the centre of the tunnel. Franzius (2003) investigated the behaviour of buildings due to the tunnel-induced subsidence using a 3D ICFEP (Imperial College Finite Element Program). The 3D excavation process was modelled by a step-by-step approach, i.e. successive removal of elements in front of the tunnel face while successively installing lining elements behind the tunnel face. A number of factors such as the influences of the mesh boundary, the tunnel construction

length, and the excavation length related to the 3D modelling of the tunnel construction were discussed. Mroueh and Shahrour (2003) performed a full 3D FEM modelling to study the interaction between tunnelling in soft soils and an adjacent surface building. Their analysis indicated that the tunnelling-induced forces largely depended on the presence of the adjacent building and the neglect of the building stiffness in the tunnelling-structure analysis yielded significant over-estimations of internal forces in the building members.

To sum up, most of the research on tunnelling to date has been focusing on the assessment of the ground surface settlement trough although some research is beginning to pay attention to the interaction between tunnelling and existing surface structures such as adjacent buildings. Relatively little research work can be found in the literature on the interaction between a tunnel and subsurface structures, such as adjacent tunnels and their existing support systems. Moreover, most numerical analyses are 2D simulations and few of them involve full 3D modelling. Furthermore, almost all of them only deal with the tunnel excavation and the liner support, and none of them model the rock bolt support, which commonly accompanies the liner support in tunnel construction in the Sydney region, Australia (Pells, 2002).

In this paper, we propose to study the effects of tunnelling on the existing support system (i.e. shotcrete lining and rock bolts) of an adjacent tunnel by means of a full three-dimensional finite element model using a Mohr–Coulomb elastoplastic constitutive law with a non-associated flow rule, which is the extension of a previous paper (Liu et al., 2007) dealing with 3D linear elastic modelling. The main objectives are threefold: first, to develop the numerical method to be used in this study; second, to investigate the effect of tunnelling on the existing support system of an adjacent tunnel; and, third, to address the influence of the tunnel construction length, the boundary conditions and the mesh, and the position between the new and existing tunnels on the results.

2. Numerical model and method

A rigorous analysis of the tunnel–structure (i.e. the existing support system of an adjacent tunnel) interaction problem is a difficult task because of: (1) the presence of the adjacent tunnel as well as its existing support system in the construction process of the new tunnel; (2) the presence of several materials (rock mass, shotcrete and steel) with very different stiffnesses and mechanical behaviour; (3) the presence of several types of contacts, such as the interaction between the shotcrete lining and surrounding rock mass, and the interaction between the rock bolts and surrounding rock mass; and (4) the three-dimensional nature of the problem. Therefore, to reproduce correctly the deformational mechanism, the analysis cannot be treated as 2D with plane strain or axisymmetry, but requires the use of full three-dimensional modelling accounting for the presence of the adjacent tunnel, its existing support system, the tunnelling process, the several types of materials and their interactions. ABAQUS (ABAQUS, 2001) is a general-purpose finite element program which is robust enough to deal with the issues mentioned above. Thus, ABAQUS was used in this study as the main numerical tool, i.e. to perform the finite element analysis. Moreover, because of the particular characteristics of the problem in tunnelling engineering, such as the generation of initial stress fields, the excavation of elements step by step and the adding of support elements step by step, a three-dimensional program called TUNNEL3D (Liu et al., 2007) was developed by the authors using Visual C++ and OpenGL to deal with these issues: i.e. to modify the input data step by step for ABAQUS, control ABAQUS to perform the finite element calculation, analyse the ABAQUS results, and graphically display as well as retrieve the analysis results since the ABAQUS results can not be directly used in this case.

2.1. Geometrical and numerical models

Figs. 1 and 2 present the geometrical and finite element models, respectively, of the problem under consideration

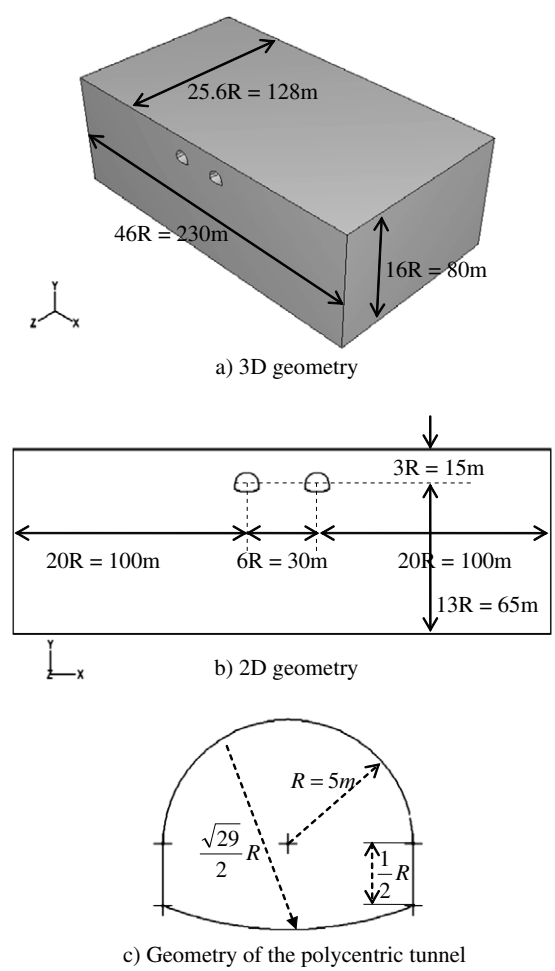

Fig. 1. Geometrical model: (a) 3D geometry; (b) 2D geometry; (c) geometry of the polycentric tunnel.

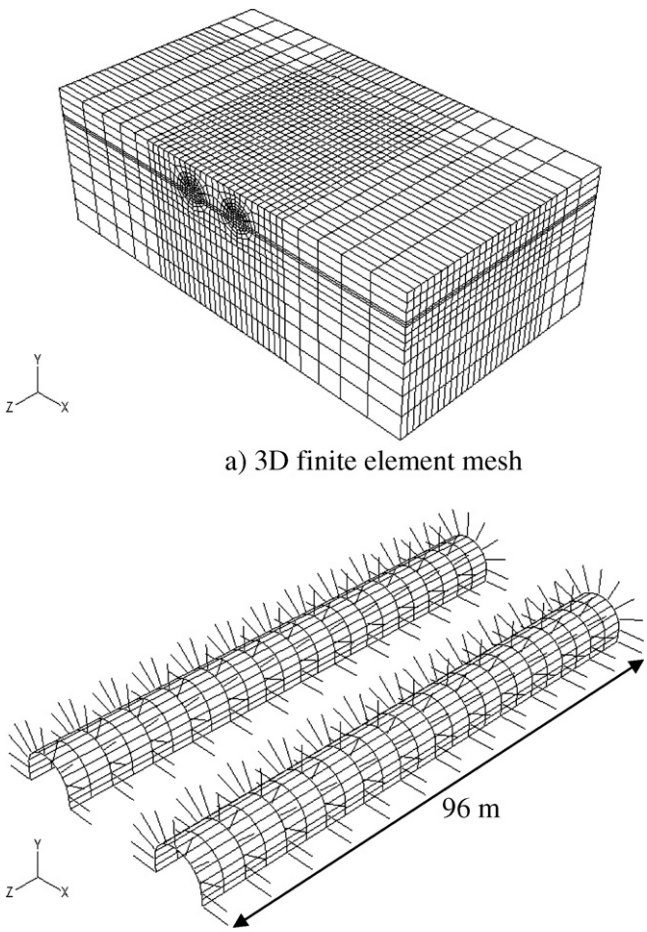

a) 3D finite element mesh

b) Enlarged view of the mesh of the support system

Fig. 2. Three-dimensional finite element model.

which concerns the interaction between a new tunnel and the existing support system of an adjacent tunnel. The length, width and height of the model are 230 m, 128 m, and 80 m, respectively as shown in Fig. 1a. Both the existing and new tunnels have a polycentric cross-section (Fig. 1c) and the diameter of the arch in the top heading of tunnels is $2R = 10$ m, which is referred to as the characteristic diameter ($D_{tun} = 10$ m) of the tunnel in this study. The distance between the centres of the existing and new tunnels is $L_{dis} = 3D_{tun}$ and the cover depth is $L_{dep} = 1.5D_{tun}$ (Fig. 1b). The finite element mesh (Fig. 2a) includes 16254 eight-node isoparametric hexahedral elements with 18,200 nodes, 672 four-node shell elements with 750 nodes, and 1430 two-node beam elements with 1716 nodes to model the behaviour of rock mass, shotcrete lining and rock bolts, respectively. Both the existing and new tunnels will be constructed for a length of 96 m and supported using the shotcrete lining and rock bolts, as shown in Fig. 2b.

2.2. Modelling of tunnel excavation and support phases

The tunnelling process is modelled using a step-by-step approach in the Z direction of the model (Fig. 2a): the successive removal of excavation elements in front of the tunnel face while successively installing shotcrete lining (and rock bolt) elements behind the tunnel face, as shown in Fig. 3. In each step, the tunnel face progresses by a distance $L_{exc} = 4$ m. For an excavated element, just prior to the excavation step, the force that the element to be excavated is exerting on the remaining part of the model at the nodes on the boundary between them are stored. The effect of the excavated elements on the rest of the model is then calculated. In order to ensure that the application of the excavation forces has a smooth effect on the model, the forces are ramped down gradually. The excavated element remains inactive in subsequent analysis steps. For a support element, although it can not be created during the calculation process, all support elements are created in the initial mesh of the numerical model and then removed in the first analysis step. It is subsequently reactivated in the support step to simulate the support provided by the shotcrete lining and rock bolts.

2.3. Interaction between shotcrete lining and surrounding rock mass

The shotcrete lining with a thickness of $t = 250$ mm is modelled using four-node shell elements with five integration points in the thickness direction. These shell elements are constrained to move with the exposed tunnel surface after the excavation to model the interaction between the shotcrete lining and the surrounding rock mass. Thus, the shotcrete lining is tied to the exposed tunnel surface during the subsequent simulation so that the shotcrete lining follows the motion of the exposed tunnel surface.

2.4. Interaction between rock bolts and surrounding rock mass

The rock bolt is characterized by its length $L_{bolt} = 5$ m, its cross-section area $s = \pi r^2 = \pi \times (0.01)^2$ m^2 and its spatial distribution, as shown in Fig. 2b. In total, 286 rock bolts are inserted into the surrounding rock mass with a primary objective of trying to increase its stiffness and/or strength with respect to tensile loads. If we consider the fact of a large number of rock bolts, and the fact that bolts are several meters long and only have a diameter of two centimetres, it is traditionally thought as very difficult to solve such problems with FEM because of the difficulties arising from the construction and regularity of such a finite element mesh as well as the numerical difficulties (Ostrava, 1997). In this study, the rock bolts are modelled using two-node beam elements, which are embedded into the eight-node isoparametric hexahedral elements to model the interaction between the rock bolts and the surrounding rock mass. Therefore, the beam element embedded in the solid elements considers deformations along the entire length of

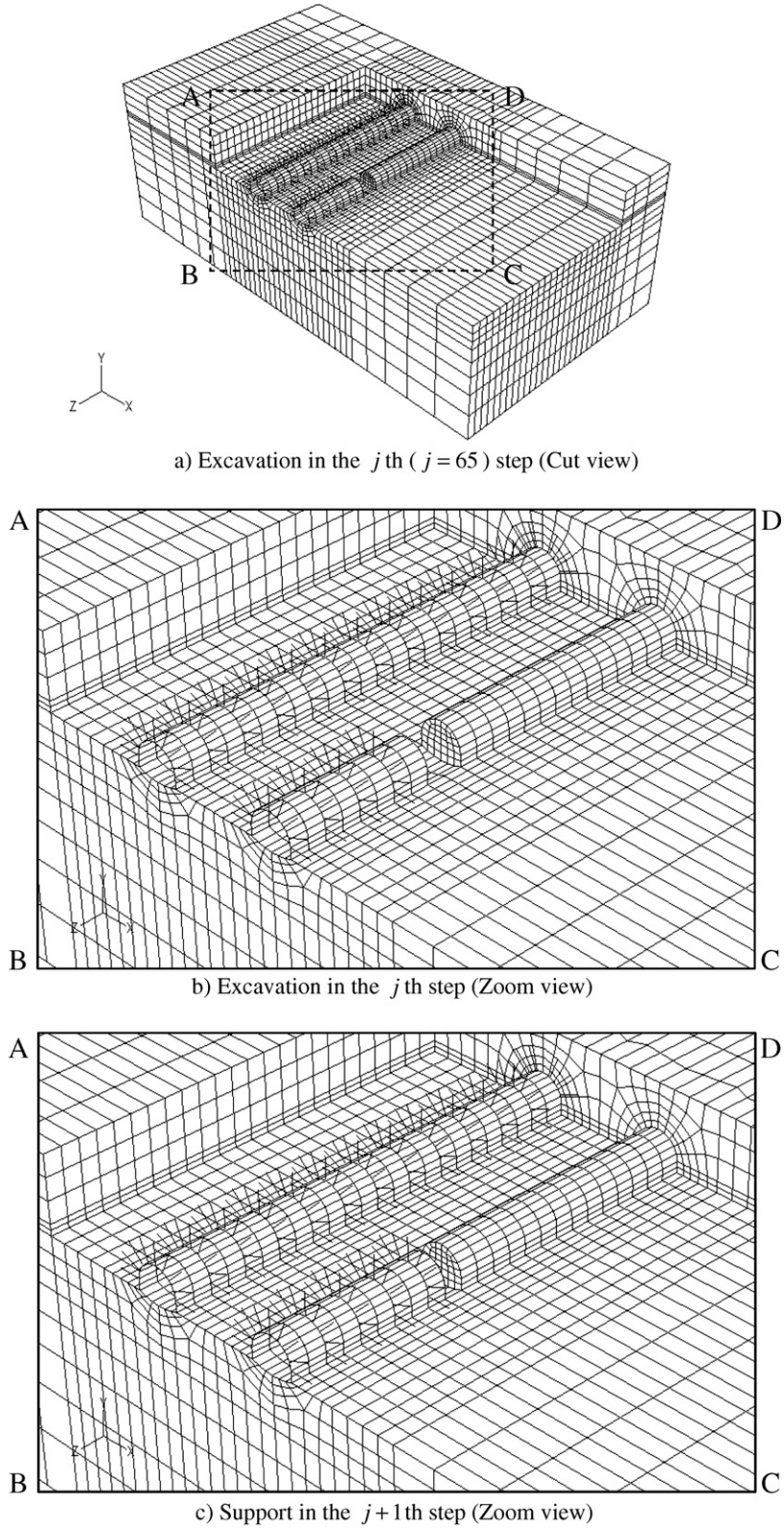

Fig. 3. Excavation and support phases in the construction of the new tunnel.

the rock bolt rather than at specific points and thus it is useful for modelling such reinforcement systems as rock bolts where grout materials may fail in shear over some length of the reinforcement.

2.5. Geologies, initial stresses, boundary conditions and loads

In most of the metropolitan area of the Sydney region, the Wianamatta Group shales and the Hawkesbury

Sandstone are the dominant near surface rocks but it is in the Hawkesbury Sandstone that most of tunnels are constructed (Branagan, 1985; Pells, 2002). According to Pells's (2002) study, the intact Hawkesbury Sandstone core is a benign medium, whose unconfined compressive strength, Brazilian tensile strength, and Young's modulus are 25–45 MPa, 2–3 MPa, and 2.5–8 GPa, respectively. However, there are a lot of weaknesses in the Hawkesbury Sandstone such as bedding (including facies bedding and cross bedding) discontinuities, joints and faults (Branagan, 1985; Pells, 2002), which make the substance properties of rock mass at the "tunnel scale" are very low. Unfortunately, no agreements have been achieved on the field scale properties of the Hawkesbury Sandstone to be adopted in practice. In this study, very low parameters are used to represent the substance properties of the Hawkesbury Sandstone at the "tunnel scale", as described later in Section 2.6. Moreover, the regional stress fields in the Hawkesbury Sandstone of the Sydney region can be approximately represented using the following equations proposed by Pells (2002), as shown in Fig. 4:

$$\sigma_x = \sigma_{\mathrm{NS}} = 1.5 + 1.2\sigma_{\mathrm{V}} \text{ MPa} \tag{1}$$

$$\sigma_y = \sigma_{\mathrm{V}} = 0.024H \text{ MPa} \tag{2}$$

$$\sigma_z = \sigma_{\mathrm{WE}} = 0.5\sigma_{\mathrm{V}} \text{ MPa} \tag{3}$$

where σ_{V} is the vertical stress, σ_{NS} is the horizontal tectonic regional stress perpendicular to the horizontal axis of tunnels, σ_{WE} is the horizontal tectonic regional stress along the horizontal axis of tunnels and H is the depth of the monitored location.

Before the driving of the new tunnel, the existing support system of the adjacent tunnel and the surrounding rock mass have been initially stressed and deformed. Therefore, in order to investigate the effect of tunnelling on the existing support system, it is important to generate the initial stress and deformation fields before simulating the driving of the new tunnel. In tunnelling engineering, the initial deformation is usually regarded as zero (Gioda and Swoboda, 1999) since the deformation has already been finished before the construction of the new tunnel. The initial stress fields can be obtained using either empirical methods, analytical methods or numerical methods. In this study, the initial stress fields are obtained through a series of finite element calculations by simulating the excavation and support phases of the existing tunnel in the Hawkesbury Sandstone with the natural regional stress field. It should be noted that the loads that surface structures impose on the ground are not considered in the calculation of the initial stress field. During the construction of the new tunnel, the obtained initial stress field is retained and the initial deformation is reset to zero.

In the numerical analysis, the left and right surfaces of the model shown in Fig. 2a are fixed in the X direction, the front and back surfaces are fixed in the Z direction, the bottom surface is fixed in the Y direction and the top surface is free in all directions.

The vertical stresses are calculated according to the self weight of the overburden rock mass, i.e. Eq. (2), and the horizontal tectonic regional stresses are obtained using Eqs. (1) and (3).

2.6. Elasto-plastic constitutive models

The behaviour of the surrounding rock mass is assumed to be governed by an elasto-plastic constitutive relation based on the Mohr–Coulomb criterion with a non-associative flow rule. As shown in Fig. 5, the Mohr–Coulomb yield function and the plastic potential are given by (ABAQUS, 2001)

$$F = R_{mc}q - p\tan\varphi - c = 0 \tag{4}$$

$$G = \sqrt{(\varepsilon C|_0 \tan\psi)^2 + (R_{m\omega}q)^2} - p\tan\psi \tag{5}$$

where c, φ and ψ designate the cohesion, the friction angle and the dilatancy angle of the rock mass, respectively; p, q, ε and $C|_0$ stand for the mean stress, the Mises stress, the meridional eccentricity and the initial cohesion yield stress, respectively; R_{mc} and $R_{m\omega}$ are functions of the parameters mentioned above. The main physical–mechanical parameters of the surrounding rock mass are a Young's modulus $E = 200$ MPa, a Poisson's ratio $v = 0.3$, a cohesion $c = 0.5$ MPa, a friction angle $\varphi = 38°$ and a dilatancy angle $\psi = 19°$. The behaviour of the shotcrete lining is assumed to be governed by an elastic perfectly-plastic relation with a Young's modulus $E = 25{,}000$ MPa, a Poisson's ratio $v = 0.2$, and a yield stress $\sigma_{\mathrm{yield}} = 20$ MPa. The behaviour of the rock bolts is also assumed to be elastic perfectly-plas-

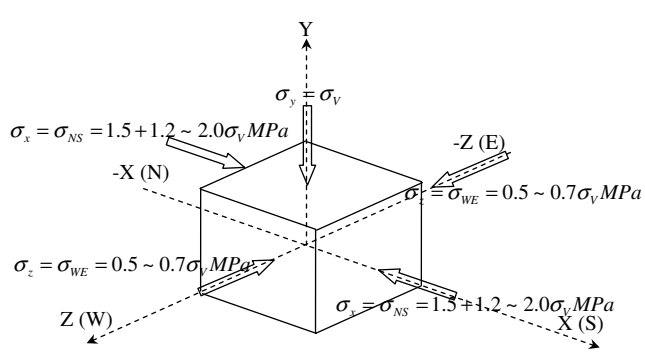

Fig. 4. Regional stress fields in the Sydney region.

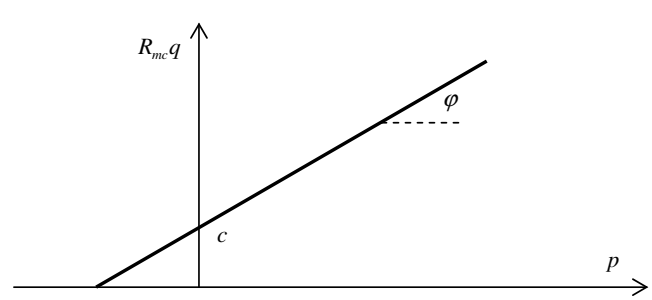

Fig. 5. Mohr–Coulomb yield surface in the meridional plane.

Table 1
Physical–mechanical properties of rock mass, shotcrete lining and rock bolts

Material	E (GPa)	v	c (MPa)	φ (°)	ψ (°)	Model
Rock mass	0.2	0.3	0.5	38	19	Mohr–Coulomb plasticity model
Shotcrete lining	25	0.2	$t = 250$ mm. Perfect plasticity model with yield stress = 20 MPa			
Rock bolts	200	0.3	$L_{bolt} = 5$ m, $r = 10$ mm. Perfect plasticity model with yield stress = 400 MPa			

tic with a Young's modulus $E = 200{,}000$ MPa, a Poisson's ratio $v = 0.3$, and a yield stress of 400 MPa. Table 1 summarizes the main physical–mechanical properties of the surrounding rock mass, the shotcrete lining and the rock bolts.

2.7. General analysis procedures – ABAQUS and TUNNEL3D

As pointed out by Potts (2003), several methods such as the tangent stiffness algorithm, the visco-plastic algorithm, the (modified) Newton–Raphson algorithm exist for solving the nonlinear equation. In this study, the Newtown–Raphson method incorporated in ABAQUS is used to solve the nonlinear equation to describe the tunnelling-structure interaction problem, which can be written as the following in the incrementing form (ABAQUS, 2001):

$$[K_{i,j}]\{\Delta d_{i,j}\} - \{\Delta R_i\} = \Psi_{i,j} \tag{6}$$

where the indices i and j stand for the increment and iteration numbers, respectively, $[K_{i,j}]$ is the stiffness matrix in the j iteration step of the i increment step, $\{\Delta d_{i,j}\}$ is the displacement vector, $\{\Delta R_i\}$ is the right-hand-side load vector, and $\Psi_{i,j}$ is the residual load. Thus, the simulation is broken into a number of increments i and the approximate equilibrium configuration is found at the end of each increment i. During the solving process, the Newton–Raphson method firstly uses the material's tangent stiffness $K_{i,j}$ and the load increment ΔR_i to calculate a displacement $\Delta d_{i,j}$. Then, the strain change at the end of each iteration j is calculated from the displacement $\Delta d_{i,j}$. After that, the corresponding stress change is estimated by integrating the nonlinear constitutive model along the strain path and the material's internal force is obtained in the updated configuration. The difference between the applied load and the internal force is called the residual force $\Psi_{i,j}$. If $\Psi_{i,j}$ is less than the residual tolerance, which is set to 0.5% in this study, and the last displacement correction $\Delta d_{i,j}$ is small (1% in

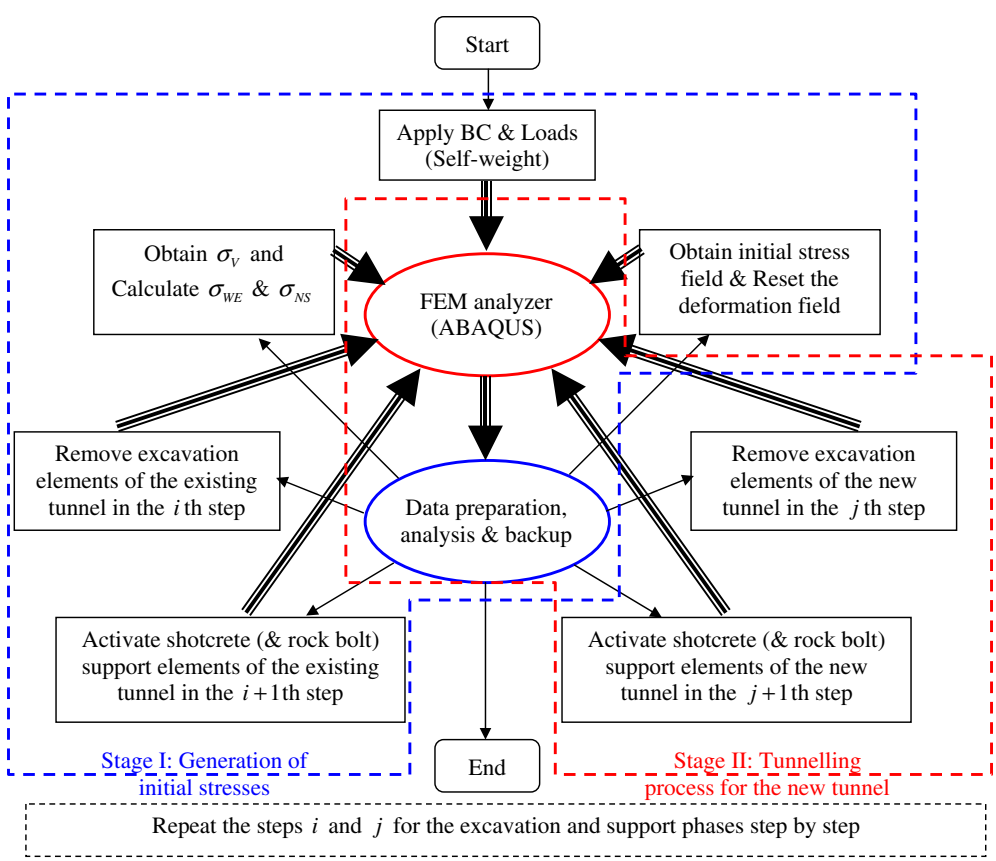

Fig. 6. Flowchart of TUNNEL3D showing the tunnel analysis procedure.

this study) relative to the total incremental displacement Δd_i, the solution is said to have converged for the increment i.

The numerical analysis procedure is then performed by means of TUNNEL3D, which presents facilities to control ABAQUS to solve the 3D and nonlinear tunnelling–structure interaction problem in the tunnelling process, as shown in Fig. 6. It can be seen that the general analysis procedure can be divided into two stages: i.e. Stage I: the generation of initial stresses, which includes the construction procedure for the existing tunnel; and Stage II: the tunnelling process for the new tunnel. The analysis procedure is described in more detail in the following:

(1) Establish the equilibrium conditions for the model with the boundary conditions and loads as specified in Section 2.5 to obtain the vertical stress σ_V caused by the self weight of the rock mass, which is defined as Step 1 in this study.
(2) Calculate the horizontal regional stresses σ_{NS} and σ_{WE} according to Eqs. (1) and (3), respectively, and establish equilibrium for the model with the vertical stress and the horizontal regional stresses, which is called as Step 2.
(3) Remove the elements in the ith excavation step of the existing tunnel and establish equilibrium for the model.
(4) Reactivate the elements in the $i+1$th support step of the existing tunnel to simulate the support provided by the shotcrete lining (and rock bolts) and establish equilibrium. It should be noted that the support elements for the shotcrete lining are activated in each support step but the support elements for the rock bolts are activated in every other support step.
(5) Repeat the procedures described in (3) and (4), which correspond to Steps 3–48. After the construction of the existing tunnel is completed, the initial stress and deformation fields are obtained for the driving of the new tunnel. Following the discussion in Section 2.5, the initial stress field is retained and the initial deformation is reset to zero in the subsequent analysis steps since the deformation has already been finished before the driving of the new tunnel. Consequently, the deformation referred to hereafter are due to the driving of the new tunnel.
(6) Repeat the procedures described in (3) and (4) to simulate the excavation and support phases of the new tunnel, which correspond to Steps 49–94. Fig. 3b and c show the numerical models in the excavation and support steps, respectively, during the driving of the new tunnel, where $j = 65$. It must be pointed out that during the support phases, not all of the exposed tunnel surfaces are supported in the support step, as shown in Fig. 3c. The unsupported surfaces near the advancing face of the tunnel allow some deformations to be released before the installation of the shotcrete lining and rock bolts (Liu et al., 2007). The actual properties of the shotcrete, such as stiffness and strength, are time dependent and are not considered in the current parametric analyses. Hence, the computed values in this study should only be taken for comparative purpose and the future study should perform time dependent 3D finite element analyses to take green shotcrete deformations into consideration. After the construction of the new tunnel is completed, the whole analysis is finished.

Thus, the effects of tunnelling on the existing support system of the adjacent tunnel are quantified through finite element calculations in 94 analysis steps. Steps 1–48 are used to generate the initial stress fields, which correspond to Stage I in Fig. 6 and Steps 49–94 are implemented to simulate the driving process of the new tunnel, which correspond to Stage II in Fig. 6. It should be noted that in each analysis step, several finite element calculation steps may be needed to establish the equilibrium state.

3. Numerical results

The effects of tunnelling on the existing support system of an adjacent tunnel are analysed here. Particular attention is paid to the changes of stresses on the existing support system. Following the sign convention in solid mechanics, tensile stresses and extensional strains are referred to as positive, while on the other hand, compressive stresses and strains are taken as negative throughout this paper.

3.1. Evolutions of stress and deformation fields in the tunnelling process

During the driving process of the new tunnel, the evolution of stress (and deformation) fields of the rock mass, shotcrete lining and rock bolts is as depicted in Fig. 7i–iii, respectively. Fig. 7i and ii are generated by TUNNEL3D, and the contours are of principal stresses at elemental integration points. The tensile stress is represented by the colours at the white end of the contour spectrum and the compressive stress is represented by the black end. The nodal displacement is exaggerated by 20 times to clearly show the deformation. Fig. 7iii is generated using ABAQUS, and the relative sizes of the arrows indicate the magnitude of principal stresses. The arrows with arrowheads pointing in toward the arrow shaft (grey colour) represent compressive stresses and the arrows with arrowheads pointing out from the arrow shaft (black colour) represent tensile stresses. It should be noted that the rock bolts in this study are not pre-stressed. Since the deformation field shown by ABAQUS also includes the deformation caused by the construction of the existing tunnel, the undeformed model is used in Fig. 7iii.

After a series of finite element calculations in Stage I, the initial stress (and deformation) fields before the driving of

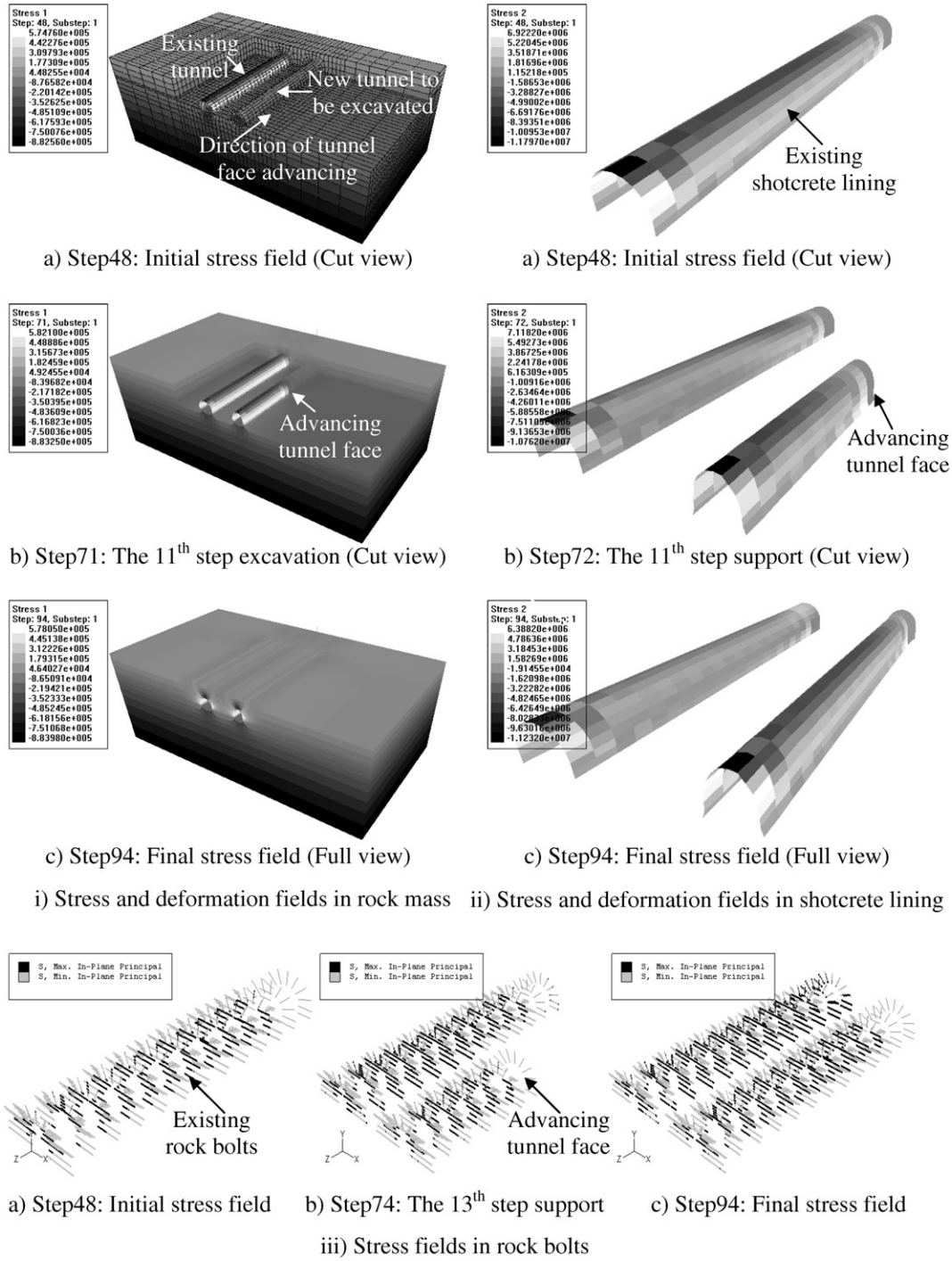

a) Step48: Initial stress field (Cut view)
a) Step48: Initial stress field (Cut view)
b) Step71: The 11th step excavation (Cut view)
b) Step72: The 11th step support (Cut view)
c) Step94: Final stress field (Full view)
c) Step94: Final stress field (Full view)
i) Stress and deformation fields in rock mass
ii) Stress and deformation fields in shotcrete lining
a) Step48: Initial stress field
b) Step74: The 13th step support
c) Step94: Final stress field
iii) Stress fields in rock bolts

Fig. 7. Evolution of stress and/or deformation fields in the rock mass, shotcrete lining and rock bolts during the excavation and support phases of the new tunnel.

the new tunnel are obtained as shown in Fig. 7i–iiia for the rock mass, shotcrete lining and rock bolts, respectively. Due to the relatively high horizontal regional stress compared with the gravity force in the Sydney region, the existing tunnel is squeezed in the horizontal direction. That is why there are high compressive stresses (black colour) around the top heading and the bench of the existing tunnel (Fig. 7i and iia), and large tensile stresses (white colour) in the lateral sides (Fig. 7i and iia). The parts of rock bolts closest to the tunnel opening experience tensile stresses (black arrows in Fig. 7iiia) although other parts are more or less compressed (grey arrows in Fig. 7iiia) because of the high stiffness compared with that of the rock mass. During the driving process of the new tunnel in Stage II, the excavation induces high stress concentrations in the rock mass (Fig. 7ib) and the shotcrete lining (Fig. 7iib)

around the advancing tunnel face. The lateral sides of the new tunnel move toward the tunnel opening and the crown moves upward in spite of the gravity force because of the relatively high horizontal regional stresses. It should be noted that just after the reactivation of support elements, the newly added shotcrete lining and rock bolts in the current analysis step carry almost no stress, as shown by the grey colours around the advancing tunnel face in Fig. 7iib and by the arrows (no arrows) around the advancing tunnel face in Fig. 7iiib, respectively, since they are installed after the deformation of the rock mass caused by the excavation in the previous step is released, i.e. they are passive supports. In subsequent steps, these supports are loaded due to the stress disturbances induced by subsequent excavations. The comparisons between the stresses of the existing shotcrete lining in Fig. 7iia and b, and between the stresses of the existing rock bolts in Fig. 7iiia and b of the preceding tunnel reveal the driving of the new tunnel greatly influences the stresses of the existing support system. This kind of influence is most significant while the advancing tunnel face is passing the existing support system and is minor when the face is far from it, which will be quantitatively explained in Section 3.2. Fig. 7i–iiic record the final stress and/or deformation fields after the driving of the new tunnel.

3.2. Effects of tunnelling on the existing support system

In order to quantitatively evaluate the effects of tunnelling on the existing support system, several locations depicted in Fig. 8 are monitored. Fig. 9 records the major principal stress, the minor principal stress and the maximum shear stress on the shotcrete lining (Fig. 9a) and the major principal stress on the rock bolts (Fig. 9b) at the centre of the existing tunnel in the longitudinal direction before (the left-hand pictures in Fig. 9) and after (the

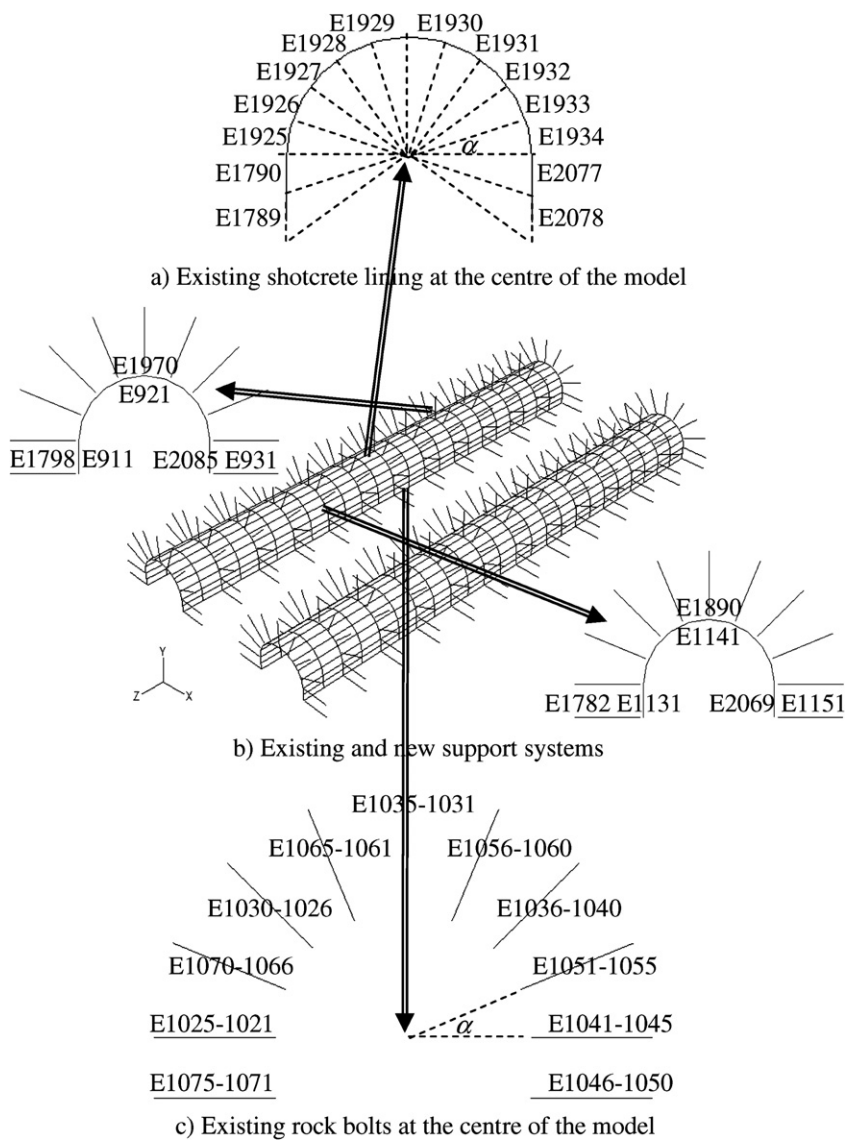

Fig. 8. Monitored locations of the existing support system.

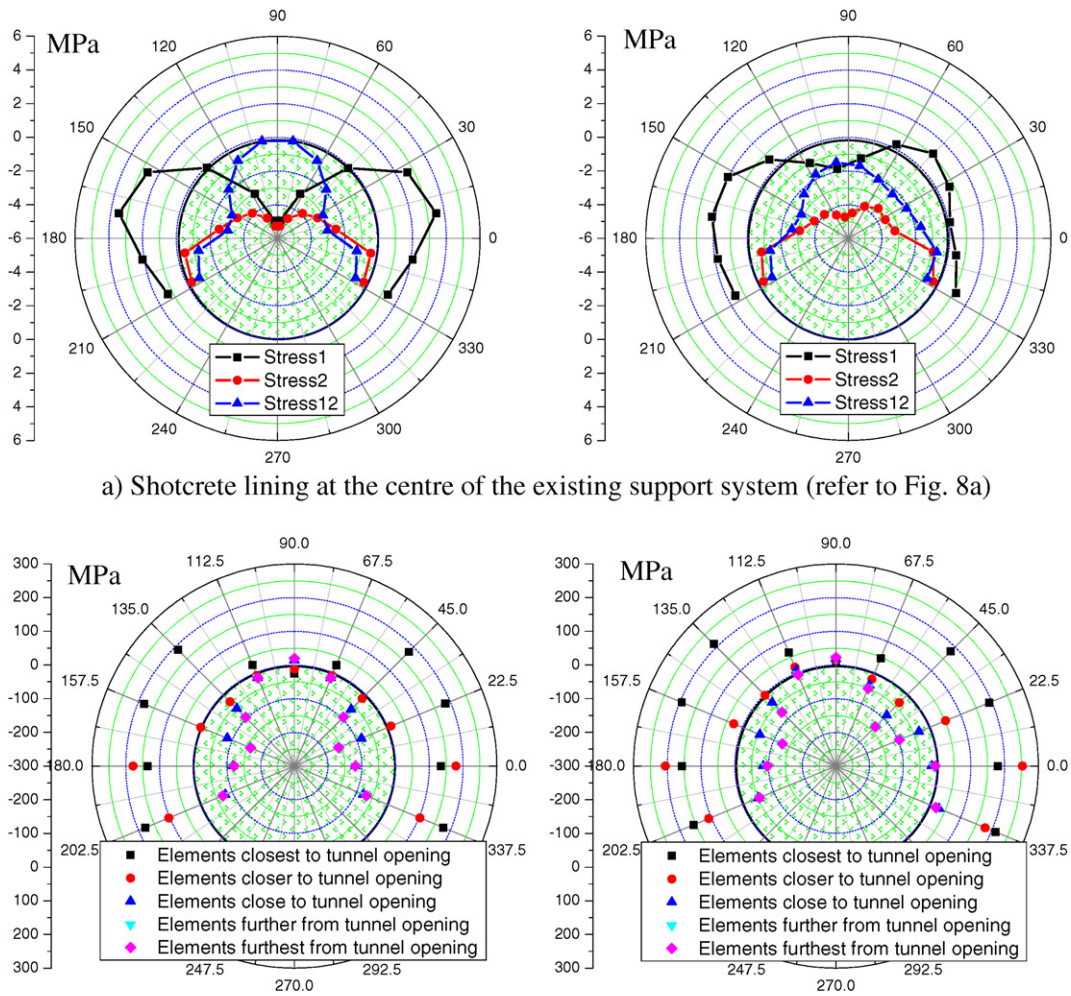

Fig. 9. Stresses on the monitored locations (refer to Fig. 8) of the existing support system before (the left-hand pictures) and after (the right-hand pictures) the construction of the new tunnel.

right-hand pictures in Fig. 9) the construction of the new tunnel. The locations of the shotcrete lining and rock bolts shown in Fig. 9 are indicated by the angle in polar coordinates, and the corresponding relationship between the angle and the location is shown in Fig. 8a and c for the shotcrete lining and rock bolts, respectively. The comparisons between the initial (the left-hand pictures in Fig. 9) and final (the right-hand pictures in Fig. 9) stresses reveal that the construction of the new tunnel greatly influences the stresses on the existing support system of the existing tunnel. The tensile stresses of the shotcrete lining located on the lateral sides of the existing tunnel decrease because of the construction of the new tunnel, which is more significant in the side of the existing tunnel closest to the new tunnel, as shown in Fig. 9a. The compressive stresses (marked using the shaded area) on the shotcrete lining located at the crown of the existing tunnel decrease, too. Thus, it is reasonable to conclude that the construction of the new tunnel horizontally parallel to the preceding tunnel with a certain distance (30 m) has no adverse effects on the existing shotcrete lining. Yamaguchi et al. (1998) analysed the construction of closely parallel shield tunnels in Kyoto city, Japan and concluded that when tunnels were positioned in horizontal alignments, the ground pressure increases in all directions and the increase in the lateral pressure is particularly great. It seems that the present results are almost exactly the inverse of those obtained by Yamaguchi et al. (1998). The reason is that there are relatively high horizontal regional stresses in the Sydney region, which alter the stresses around the tunnelling opening from tensile to compressive at the crown and from compressive to tensile in the lateral sides. Thus, if we take the high horizontal regional stresses in the Sydney region into consideration, our results are actually consistent with those

obtained by Yamaguchi et al. (1998) in Kyoto city. Moreover, as shown in Fig. 9b, the construction of the new tunnel greatly affects the existing rock bolts located in the side of the existing tunnel closest to the new tunnel, where the tensile stresses on the parts of rock bolts closest to the existing tunnel opening increased and some parts of the existing rock bolts which are originally compressed experience tensile stresses now. The existing rock bolts located opposite to the new tunnel are slightly influenced, as shown in Fig. 9b.

Fig. 10 presents the effects of tunnelling on the existing shotcrete lining and rock bolts at monitored locations shown in Fig. 8b. The *X*-coordinate of Fig. 10 is the analysis step and the *Y*-coordinate is the major principal stress in MPa. It should be noted that the steps 1–48 are the analysis steps required in Stage I to generate the initial stress and deformation fields for the existing support system, and the steps 49–94 correspond to the analysis steps in Stage II for quantifying the effect of the driving of the new tunnel on the existing support system. The analysis of the stress variation in the Stage I indicates that when the support elements are just installed, they carry almost no loads. As the tunnelling face advances, they experience cyclic loading and unloading: i.e. in the next several exca-

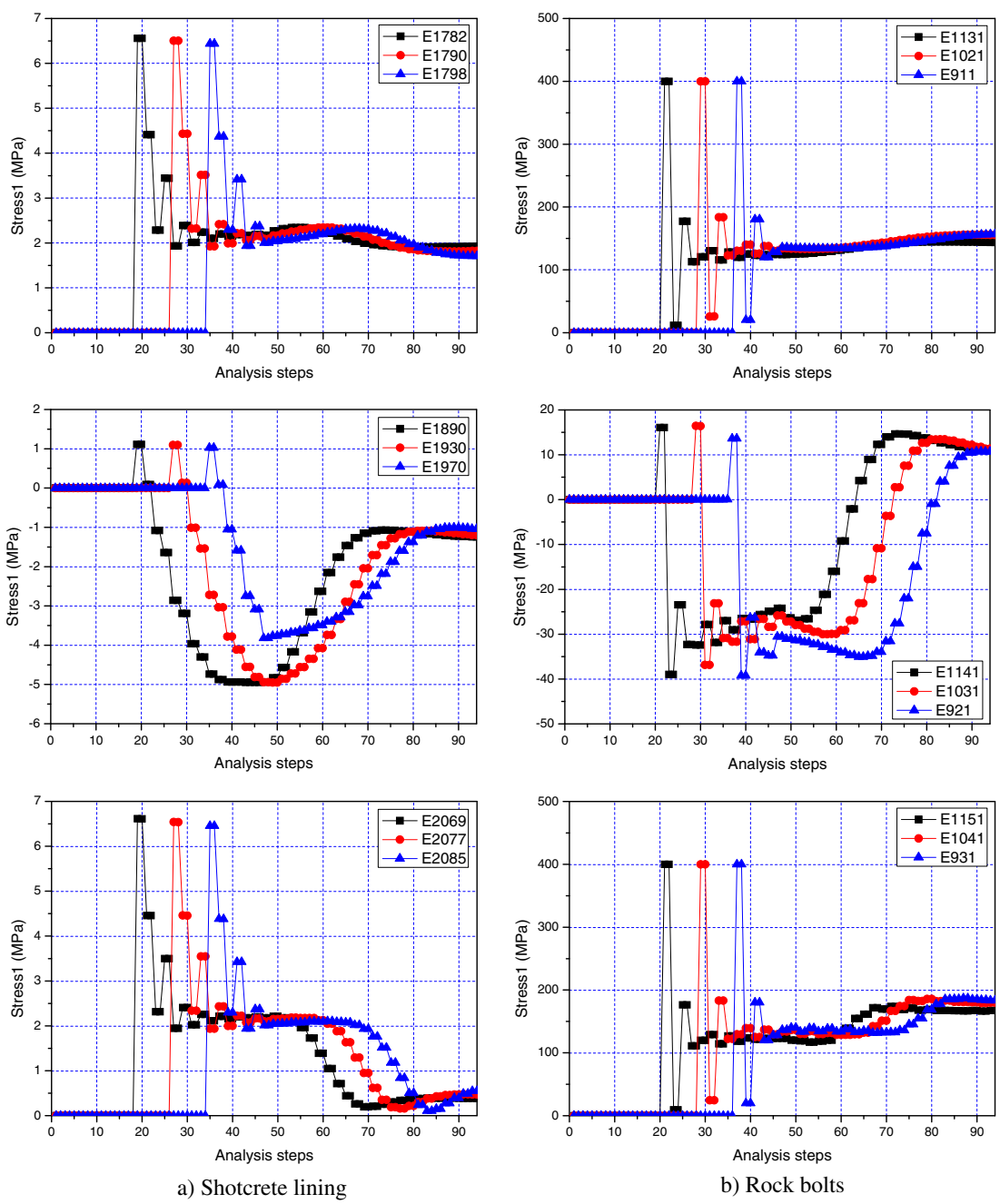

Fig. 10. Effects of tunneling on the existing support system (refer to Fig. 8 for the locations of the monitored elements).

vation steps, they carry bigger loads and in the next several support steps, they carry smaller loads. As the tunnel face goes far from them, the stresses on the shotcrete lining and rock bolts become stable. The analysis of the stress variation in Stage II reveals that the driving process of the new tunnel affects the existing shotcrete lining and rock bolts of the adjacent tunnel in the following ways:

(1) Before the advancing tunnel face approaches the measuring points, the effect of tunnelling on the stresses of the existing support system is very small.
(2) When the tunnel face approaches, passes and moves away from the measuring points, important influences are observed: significant tensile and compressive stress decreases are observed on the shotcrete lining located on the lateral sides (E1782, E1790, E1798, E2069, E2077 and E2085) and at the crown (E1890, E1930 and E1970), respectively, of the existing tunnel. Noticeable tensile stress increases are observed on the rock bolts (the parts closest to the tunnel opening) on the lateral sides (E1131, E1021, E911, E1151, E1041 and E931) of the existing tunnel while noticeable compressive stress decreases are observed on the rock bolts at the crown (E1141, E1031 and E921) of the existing tunnel. Moreover, it is noted that the effects on the existing shotcrete lining and rock bolts are more significant in the side of the existing tunnel closest to the new tunnel (E2069, E2077 and E2085; E1151, E1041 and E931) than those in the side of the existing tunnel opposite to the new tunnel (E1782, E1790, and E1798; E1131, E1021, and E911) due to the presence of the preceding tunnel and its existing support system.
(3) After the tunnel face goes far away from the existing support system, the influence gradually ceases.

3.3. Surface and subsurface ground movements and settlements (upheavals)

The loads caused by the construction of the new tunnel are transmitted through the ground movements and thus affect the existing support system of the existing tunnel. Therefore, to investigate the effects, it is important to understand the surface and especially subsurface ground movements and settlements. Fig. 11b records the development of the ground movement and settlement/upheaval profiles at the surface (Line AB) of the central transverse section of the model, as shown in Fig. 11a. Because of the relatively high horizontal regional stresses in the Sydney region, the ground surface movements and settlements present different characteristics compared with those predicted without or under low horizontal regional stresses (Peck, 1969; O'Reilly and New, 1982; Franzius, 2003): over a distance of ± 11.25 m ($1.13D$) from the centre of the new tunnel, some of the rock mass at surface moves outward the tunnel opening in the horizontal direction and the ground surface upheaves in the vertical direction. The maximum horizontal movement is $S_{hx,max} = 17.39$ mm ($0.17\%D$), the maximum vertical settlement is $S_{vy\text{–down},max} = 6.27$ mm ($0.063\%D$), and the maximum vertical upheaval is $S_{vy\text{–up},max} = 22.36$ mm ($0.22\%D$). The trough width parameter i which designates the horizontal distance between the tunnel centre line and the inflexion point on the settlement curve is equal to $i = 22.5$ m ($2.25D$) on the side of the new tunnel closest to the preceding tunnel and $i = 26.25$ m ($2.63D$) on the side opposite to the existing tunnel, which indicates the existence of the existing tunnel and its support system has a minor influence on the ground surface movements. Moreover, the obtained trough width parameter is much bigger than that ($1.17D$) predicted by Mroueh and Shahrour (2002) who considered the presence of pile foundations without the horizontal regional stresses, which reveals that the horizontal regional stresses significantly affect the ground surface movements.

In order to investigate the influence of the presence of the existing tunnel and its existing support system on the surface and subsurface ground movements and settlements, the numerical model is run again without the presence of the existing tunnel and its support system. Fig. 11c and d compares the surface and subsurface, respectively, ground movements and settlements with and without the presence of the preceding tunnel and its support system. It can be observed that the presence of the existing tunnel has a minor influence on the ground surface movements and settlement, i.e. slightly decreases the maximum horizontal movement $S_{hx\text{–diff},max} = 1.00$ mm ($5.75\% S_{hx,max}$) and the maximum vertical upheaval $S_{vy\text{–diff},max} = 2.80$ mm ($12.52\% S_{vy\text{–up},max}$). However, the presence of the existing tunnel greatly affects the subsurface ground movements, as shown in Fig. 11d, i.e. significantly decreases the horizontal movements of the sub-rock mass (i.e. Line CD in Fig. 11d) located in the side of the existing tunnel furthest from the new tunnel due to the contribution of the existing support system in the increase of the ground stiffness and greatly increases the horizontal movements of the sub-rock mass (i.e. Line EF in Fig. 11d) located in the side of the existing tunnel closest to the new tunnel because of the existing tunnel opening. Generally, for the tunnel–structure interaction problem, the so-called two-stage approach is used (such as the study conducted by Chen et al., 1999): (1) free-field tunnelling-induced ground movements are estimated based on either empirical, analytical or numerical methods; and (2) the structure's response to tunnelling is then estimated by performing a complete structural analysis of the structure subjected to the ground movements calculated in the previous step. As pointed out by Mroueh and Shahrour (2002), the structure's influence is ignored in predicting the tunnelling-induced ground movements in this two-step approach. Our results reveal that the presence of the preceding tunnel and its existing support system greatly affect the ground movements and the two-stage approach may overestimate or underestimate the ground movements depending on the locations. Thus,

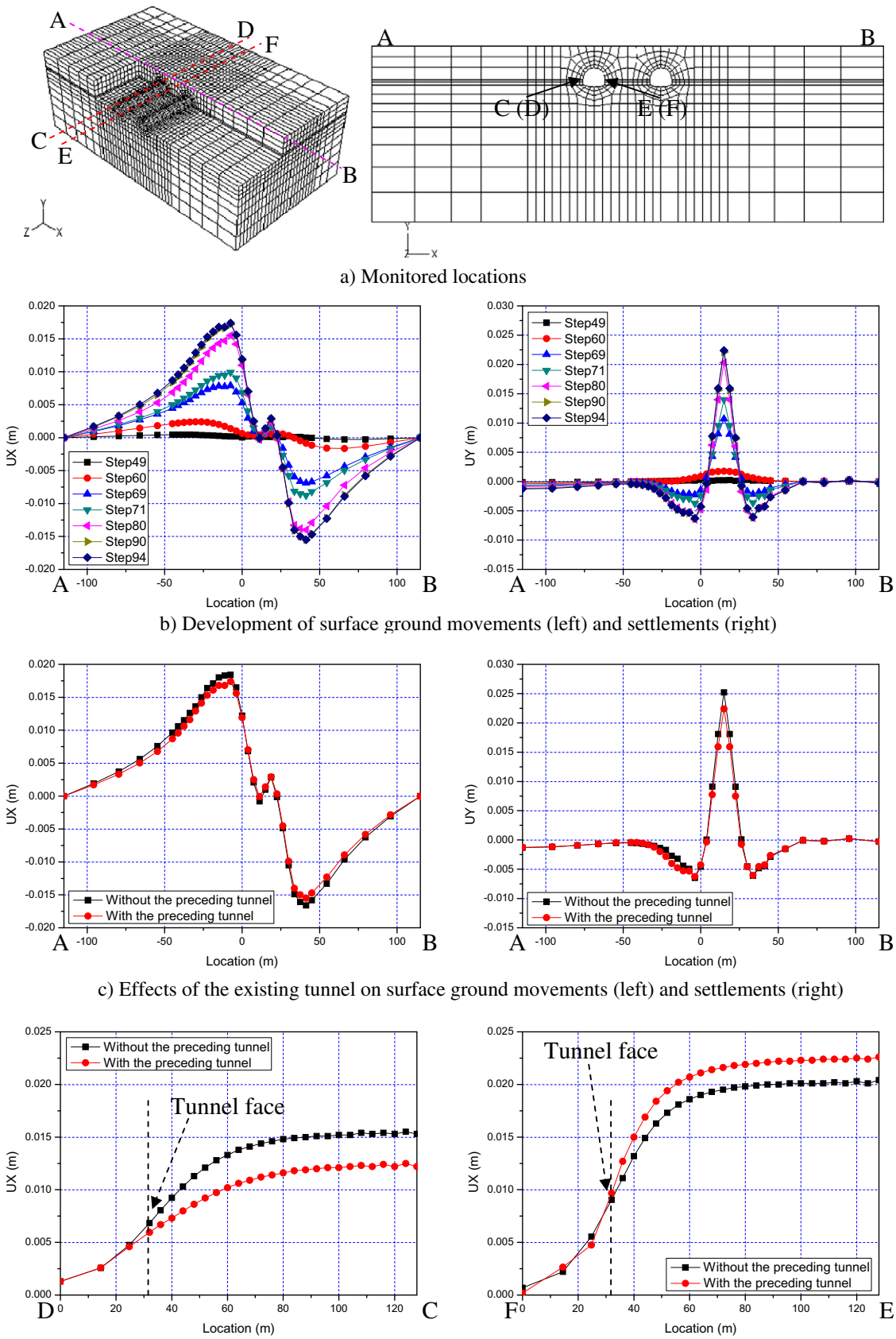

Fig. 11. Surface and subsurface ground movements and settlements.

to investigate the effect of tunnelling on the existing support system, a full 3D analysis such as that in this study must be used.

4. Discussions

The aim of this numerical analysis was to quantify the effect of tunnelling on the existing support system of an adjacent tunnel. This issue is of major interest for tunnelling operations in urban areas, due to the high interaction between the construction of new tunnels and existing structures. As pointed out in Section 2, a rigorous numerical analysis of the tunnel–structure interaction problem is a difficult task because of the presence of the existing structure, several types of materials and their interaction, and the 3D nature. In the following, a number of issues influencing the numerical results will be discussed.

4.1. Influence of tunnel construction lengths

The distribution of stresses around the advancing face of a tunnel is three-dimensional. The stress variation in tunnelling, as shown in Fig. 10, also indicates that the support system, i.e. the shotcrete lining and rock bolts, is loaded and unloaded as the tunnel face advances in a certain region and then the stress becomes stable as the tunnel face moves away. As estimated by Curran et al. (2003), at the tunnel face, the rock mass provides a support pressure that is approximately 25% of the in situ stress and this support pressure gradually reduces to zero at a distance of about 4.5D behind the advancing face. Thus, in order to make the stress on the newly added support elements become stable, the tunnel must at least be constructed for a length of 4.5D. However, Franzius (2003) argued the tunnel construction length of 4.5D was not enough for the steady state conditions to be reached behind the tunnel face in the case of the regional stress fields.

As pointed out in Section 2.5, there are relatively high regional stress fields in the Sydney region. In this study, the regional stress along the tunnel construction direction is $0.5\sigma_V$. In order to investigate if the tunnel construction length 9.6D in this study is enough, the development of surface (Line ABC in Fig. 12a) longitudinal settlements in the driving process of the preceding tunnel before the construction of the new tunnel (i.e. Stage I in Fig. 6) is depicted in Fig. 12b. It can be seen that the steady state conditions are achieved after the tunnel face advances 44–64 m (4.4D–6.4D) since the horizontal settlement profile has developed behind the tunnel face, which is consistent with Curran et al. (2003) estimations (4.5D). The stress variation of the shotcrete lining and rock bolts at the three locations (Loc-1, Centre and Loc-2) marked in Fig. 12b is shown in Fig. 10 as the tunnel face advances. Based on those results, it is concluded that the tunnel construction length 9.6D in this study is enough and the stresses on the shotcrete lining and rock bolts at the middle of the tunnel construction length can be used as the indicator to quantify the interaction between tunnelling and structure, as that presented in Section 3.2 in this study.

Thus, our results reveal that in the case of the regional stress field, the steady state conditions can also be reached at approximately 5D behind the tunnel face in tunnelling. Based on those results, it is concluded that Franzius's (2003) arguments are actually for the high regional stress in the tunnel construction direction. Actually, in our study, the regional stress along the tunnel construction direction is relatively low ($\sigma_{WE} = 0.5\sigma_V$) compared with the vertical stress and the regional stress perpendicular to the tunnel construction direction ($\sigma_{NS} = 1.5 + 1.2\sigma_V$) which is relatively high. Moreover, it is found that besides the regional stress, the tunnel cover depth also affects the achievement of the steady state conditions behind the tunnel face. As shown in Fig. 12c and d, for a tunnel cover depth of 30 m, the steady state conditions are achieved behind the tunnel face after the tunnel is constructed for a length of 84 m (8.4D). Therefore, in the 3D numerical analysis, the length of the tunnel to be constructed before the steady state conditions are achieved is actually a function of the tunnel cover depth and the regional stress field. One may argue that the tunnel should be modelled as long as possible. However, the increase of the tunnel construction length means a larger number of elements and more analysis steps. Taking the computational time and resources into consideration, the model cannot be increased without limitations.

4.2. Influence of boundary conditions and meshes

In the numerical modelling conducted in this study, the left, right, front, back and bottom surfaces of the model (Model I: $X = 230$ m, $Y = 80$ m, $Z = 128$ m and tunnel construction length = 96 m) shown in Fig. 2 are fixed. In order to investigate the influence of boundary conditions on the results, two other finite element models (Model II: $X = 230$ m, $Y = 60$ m, $Z = 64$ m and tunnel construction length = 64 m; and Model III: $X = 130$ m, $Y = 60$ m, $Z = 80$ m and tunnel construction length = 80 m) with various sizes and mesh densities, as shown in Fig. 13, were analysed and the obtained results are compared with those from model I. Fig. 14 records the comparisons of the stresses on the shotcrete lining (Fig. 8a) in the middle of the tunnel construction length obtained using the three models mentioned above. The comparisons between models I and II, as shown in Fig. 14i, indicate that model II is actually big enough to eliminate the influence of boundary conditions since both the obtained initial stress before the driving of the new tunnel and the final stress after the driving of the new tunnel (i.e. the effect of tunnelling on the stresses of the existing shotcrete lining) are almost identical to each other. Thus, in Section 4.3 to study the influence of positions between the existing and new tunnels, model II is adopted in order to save the computational time.

The comparisons between models I and III, as shown in Fig. 14ii reveal that the boundary in the X direction of model

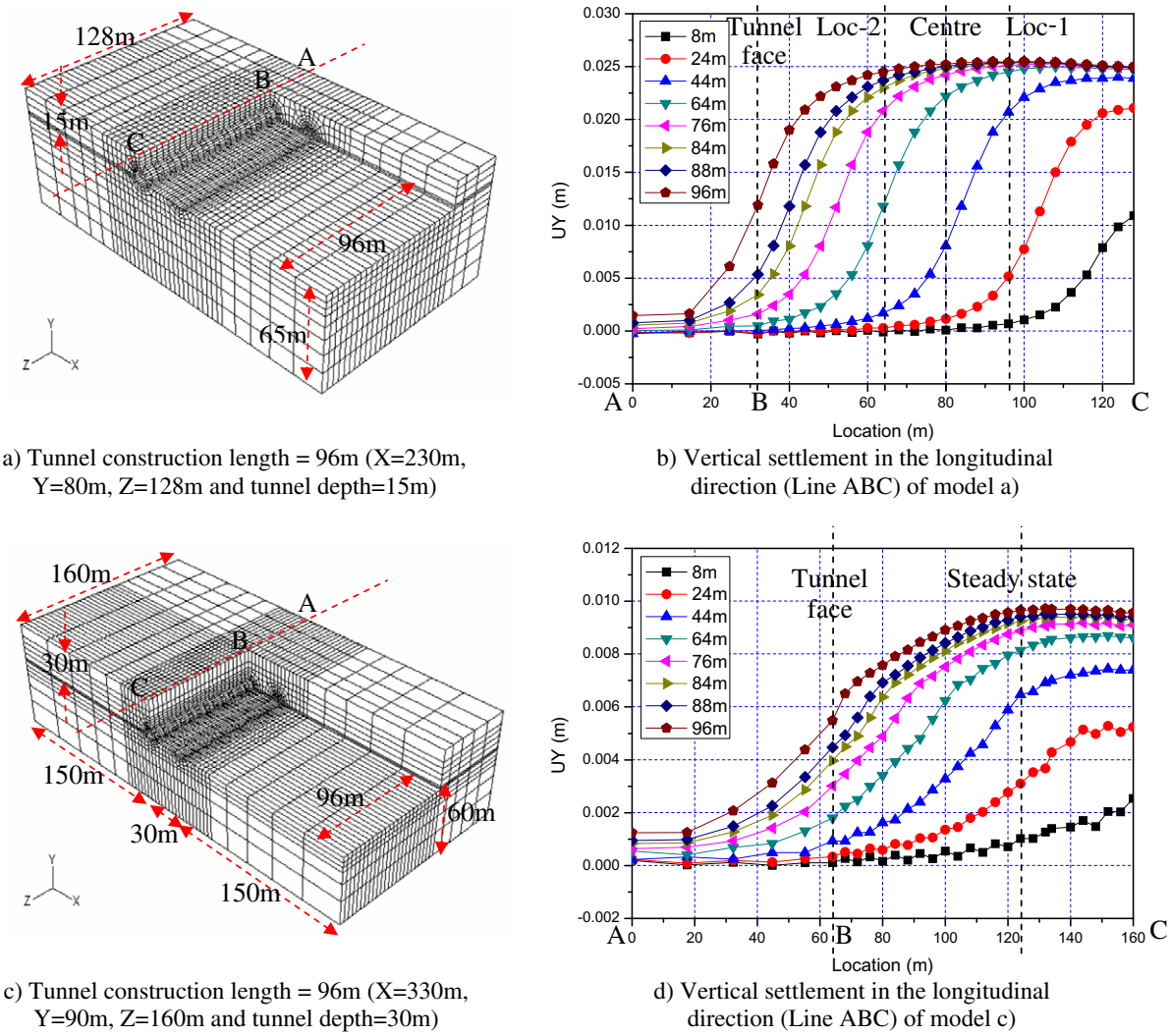

a) Tunnel construction length = 96m (X=230m, Y=80m, Z=128m and tunnel depth=15m)

b) Vertical settlement in the longitudinal direction (Line ABC) of model a)

c) Tunnel construction length = 96m (X=330m, Y=90m, Z=160m and tunnel depth=30m)

d) Vertical settlement in the longitudinal direction (Line ABC) of model c)

Fig. 12. Development of surface longitudinal settlements in the driving process of the preceding tunnel before the construction of the new tunnel.

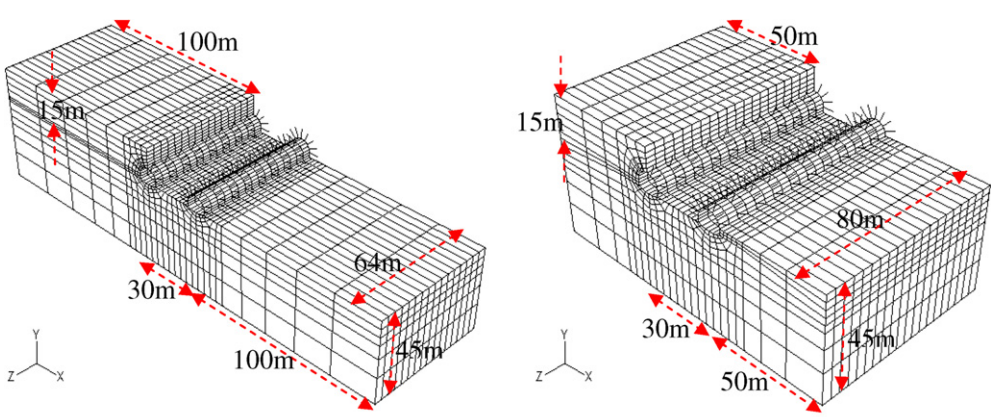

a) Tunnel construction length = 64m (X = 230m, Y = 60m and Z = 64m)

b) Tunnel construction length = 80m (X=130m, Y=60m and Z=80m)

Fig. 13. Finite element models (cut view) with various sizes and mesh densities..

III may not be far enough away. The careful observations of the resultant ground movements and plastic zones around the tunnel openings (which are not shown here in order to save space) from model III show that the relative short boundary in the *X* direction restricts the ground movements, especially the horizontal ground movements, and then influ-

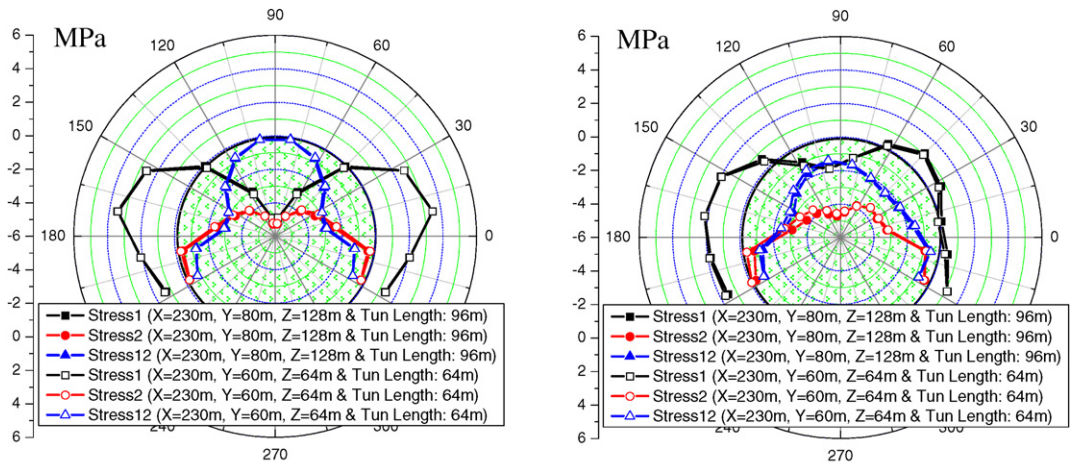

a) Initial stress b) Final stress

i) Comparison between the model a) in Fig. 12 and the model a) in Fig. 13

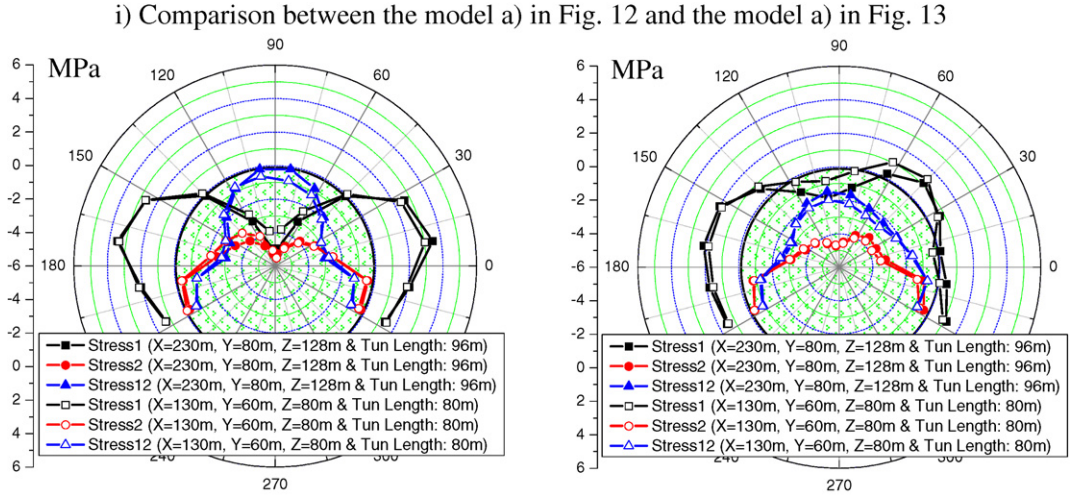

a) Initial stress b) Final stress

ii) Comparison between the model a) in Fig. 12 and the model b) in Fig. 13

Fig. 14. Influence of boundary conditions and meshes on the stresses at the centre of the existing support system (refer to Fig. 8).

ence the stresses on the shotcrete lining as well as the plastic zones around the tunnel openings. In model III, the distance between the boundary in the X direction and the central axis of the tunnel is at least $5D$. Generally, in the finite element analysis, if the boundary is at a distance five times larger than the area of interest, it is regarded as far enough away. However, in this study, because of the high regional stress in the X direction, it is found that the boundary must be located at 10 times $10D$ the length (D) of interest so that the influence of the boundary conditions can be eliminated. The obtained result is consistent with Franzius's (2003) arguments on the influence of the high regional stress although in his study, the high regional stress is in the direction of the tunnel construction.

4.3. Influence of relative positions between the existing and new tunnels

In previous sections, the relative position between the existing and new tunnels is fixed. In this section, the position (i.e. the separation and the relative location) of the new tunnel is varied to investigate the influence of the position between the existing and new tunnels on the calculated results, as shown in Fig. 15. In all cases, the tunnel located at the left or upper part of the model is the existing tunnel. Similarly, the stresses on the existing support system, i.e. the shotcrete lining and rock bolts, at the centres of the models (Fig. 8) are monitored to investigate the effect of tunnelling on the existing support system, as shown in Fig. 16. The initial stress is obtained after the construction of the existing tunnel but before the driving of the new tunnel. The comparison between the initial stresses and the final stresses reveals that the driving of the new tunnel affects the existing support system of the preceding tunnel in all cases but in different ways. In the case of horizontally parallel tunnels with a separation of 30 m, the driving of the new tunnel has almost no adverse effects on the existing shotcrete lining since both the compressive stress and the tensile stress tend to decrease, as shown in Fig. 16a and b. In the case of horizontally parallel tunnels with a

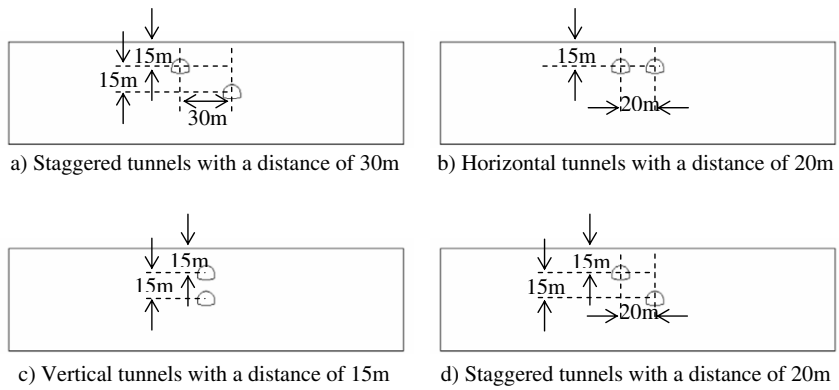

a) Staggered tunnels with a distance of 30m b) Horizontal tunnels with a distance of 20m

c) Vertical tunnels with a distance of 15m d) Staggered tunnels with a distance of 20m

Fig. 15. Relative locations between the existing and new tunnels.

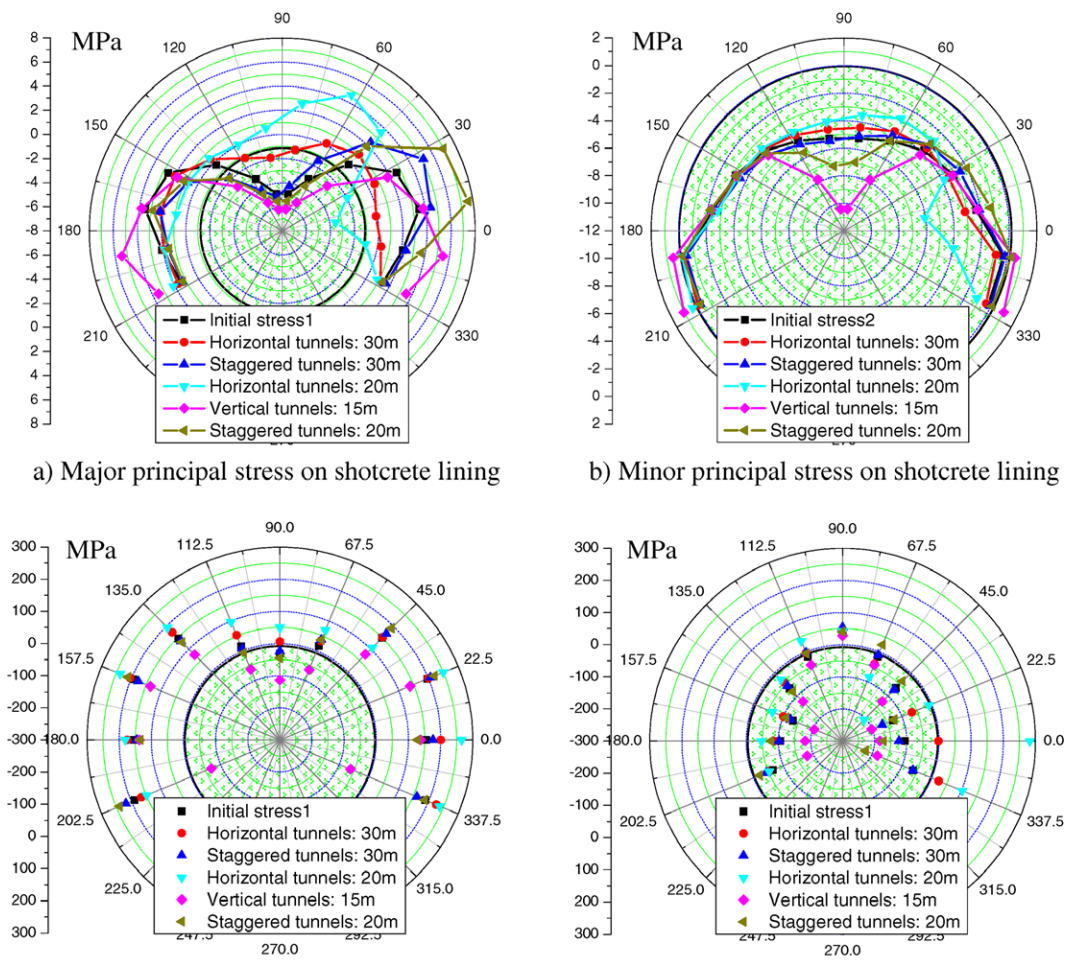

a) Major principal stress on shotcrete lining b) Minor principal stress on shotcrete lining

c) Major principal stress on rock bolts closest to the opening of the existing tunnel d) Major principal stress on rock bolts furthest from the opening of the existing tunnel

Fig. 16. Influence of relative positions between the existing and new tunnels on the stresses at the centre of the existing support system (refer to Fig. 8).

separation of 20 m, an important increase of the tensile stress is observed on the shotcrete lining located in the right-upper (between 45° and 90°) corner of the existing tunnel and an increase of the compressive stress is noticed at the right side (between 330° and 30°) of the existing tunnel. The tensile stress increment is more important since the shotcrete lining has a sufficient load bearing capacity in compression. In the case of the staggered tunnels with a separation of 30 m, the tensile stress increments are noted on the shotcrete lining located between 0° and 60°. No noticeable compressive stress increments are observed. In the case of the staggered tunnels with a separation of 20 m, besides

the tensile stress increments in the shotcrete lining located between 330° and 60°, considerable compressive stress increments are also observed on the shotcrete lining located around the top (between 60° and 120°) of the existing tunnel. In the case of vertically parallel tunnels, not only considerable increases of compressive stresses are monitored on the shotcrete lining around the top of the existing tunnel but also important increases of tensile stresses are monitored in both lateral sides of the existing tunnel. Thus, on the basis of the stress increments, especially the maximum tensile stress increments, the adverse effect of tunnelling on the existing shotcrete lining decreases in a sequence of the staggered tunnels with a separation of 20 m, the vertical tunnels, the staggered tunnels with a separation of 30 m, the horizontal tunnels with a separation of 20 m and the horizontal tunnels with a separation of 30 m. The driving of the new tunnel affects the different parts of the existing rock bolts in different ways. Fig. 16c and d present the effects of tunnelling on the parts of the existing rock bolts closest to the existing tunnel opening and furthest from the existing tunnel opening, respectively. It can be seen that in most cases, the driving of the new tunnel causes tensile stress increments of the existing rock bolts especially in the side of the existing tunnel closest to the new tunnel.

Yamaguchi et al. (1998) analysed the measured results in the construction of four closely positioned subway tunnels in Kyoto city and concluded that when the tunnels were positioned in vertical alignments, the vertical earth pressure on the existing tunnel decreased while the earth pressure on the lateral sides increased; and when the tunnels were positioned in horizontal alignments, the ground pressure increased in all directions, and the increase in the lateral pressure was particularly great. To sum up our results presented above, it is concluded: (1) when the tunnels are positioned in vertical alignments, the stresses on the shotcrete lining of the existing tunnel increase in all directions and the compressive stress increases at the top and the tensile stress increases in the sides are particularly large; (2) when

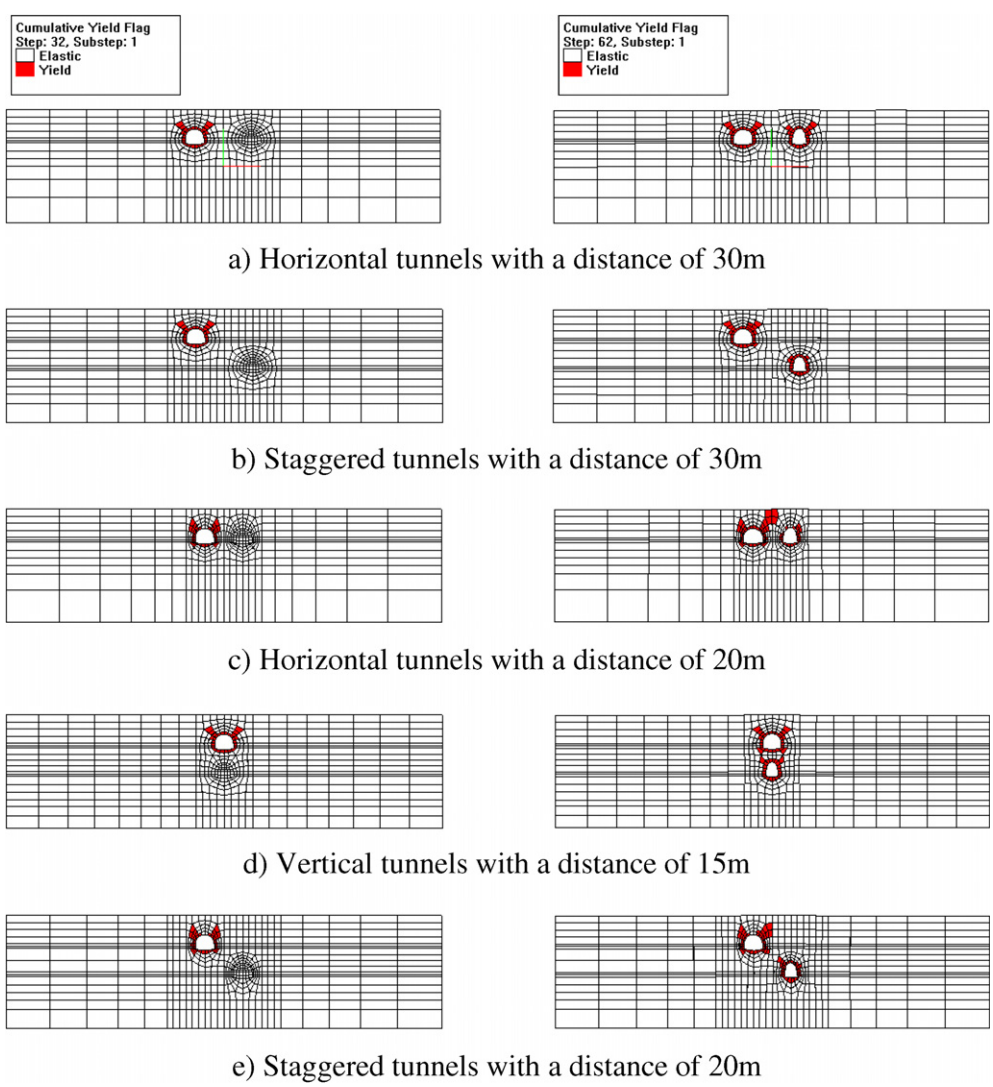

Fig. 17. Influence of relative positions between the existing and new tunnels on the plastic yield zones on the middle surface of the models before (left) and after (right) the driving of the new tunnel.

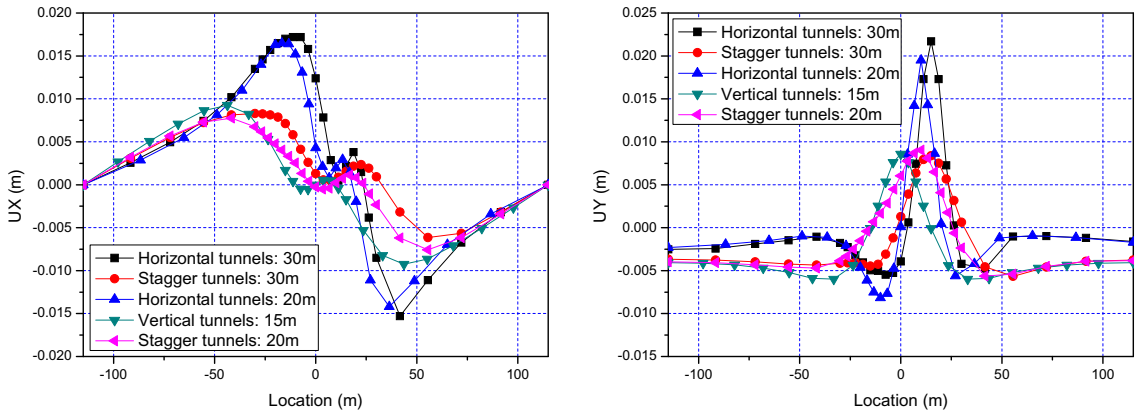

Fig. 18. Influence of relative positions between the existing and new tunnels on the ground surface movements (left) and settlements (right) in the middle section of the model.

the tunnels are positioned in horizontal alignments with a certain distance apart (i.e. 30 m), the tensile stresses on the shotcrete lining in the sides of the existing tunnel decrease. Thus, it seems that our results are almost exactly the inverse of Yamaguchi et al.'s (1998) results. However, if we take the relatively high horizontal regional stresses in the Sydney region into consideration, our results are actually consistent with Yamaguchi et al.'s (1998) results. Actually in Yamaguchi et al.'s (1998) study, they also mentioned that in another study (they did not give references) the influence of horizontally parallel shield tunnels could be described as a decrease in the lateral earth pressure. Thus, to investigate the effect of tunnelling on the existing support system, it is necessary to study the behaviour of the rock mass in between the tunnels in accordance with the characteristics of the rock mass.

In the above discussion, the behaviour of the existing tunnel is described by focusing on the distribution of the stresses on the existing support system. In the following, the effects of the driving of the new tunnel on the rock mass behaviour around the existing tunnel will be analysed. Fig. 17 depicts the plastic yield zones around the tunnel openings in the middle surfaces of the models before (the left-hand pictures in Fig. 17) and after (the right-hand pictures in Fig. 17) the construction of the new tunnel. In the figure, if the element becomes plastic according to the Mohr–Coulomb plasticity model, it is filled. Otherwise, it is unfilled. The nodal displacement is exaggerated by 20 times to clearly show the deformation. It can be seen that before the driving of the new tunnel, the rock mass located on the sides of the existing tunnel becomes plastic because of the tensile stresses and the rock mass located at the top heading and bench becomes plastic due to the compressive stresses. The plastic zones are symmetrical about the tunnel's vertical central axis, as shown by the left-hand pictures in Fig. 17. The comparisons between the plastic zones reveal that the meshes have a minor influence. The construction of the new tunnel affects the plastic zones in different ways depending on the separation and relative locations between tunnels. In the case of horizontally parallel tunnels with a separation of 30 m, the construction of the new tunnel has almost no adverse influence on the plastic zones around the existing tunnel opening although the existence of the preceding tunnel greatly affects the plastic zones around the succeeding tunnel opening. In the case of staggered tunnels with a separation of 30 m, the driving of the new tunnel slightly enlarges the plastic zone around the existing tunnel opening and the existing tunnel slightly influences the construction of the new tunnel. Moreover, it is noticed that the tunnel cover depth has an important influence on the plastic zone around the new tunnel opening. In the case of horizontal tunnels with a separation of 20 m, the plastic zone around the existing tunnel in the side closest to the new tunnel is significantly enlarged because of the driving of the new tunnel, and the existing tunnel greatly decreases the plastic zone around the new tunnel. In the case of vertical tunnels, the plastic zone around the existing tunnel is enlarged in both sides. In the case of staggered tunnels with a separation of 20 m, the plastic zone around the existing tunnel opening is greatly enlarged on the side closest to the new tunnel.

Fig. 18 summarizes the ground movements and settlements (upheavals) in the middle surface of the models obtained in all of the cases mentioned above. The comparisons between the different ground behaviour indicate that there are more horizontal movements as well as vertical upheavals when the tunnels are driven in parallel horizontally and less when they are staggered tunnels or vertical tunnels. Those results are in conformity with Yamaguchi et al.'s (1998) observations for the construction of closely spaced subway tunnels in Kyoto city. Moreover, the separation between tunnels also affects the ground surface movements and settlements.

5. Conclusions

In an urban environment, close positioning of tunnels and particularly the construction of new tunnels in close

proximity to existing structures such as tunnels and their support systems are unavoidable. Thus, the study on the interaction between a new tunnel and the existing structure is an important issue. In this paper, the effect of tunnelling on the existing support system (i.e. the shotcrete lining and rock bolts) of adjacent tunnels has been investigated using ABAQUS and TUNNEL3D through full three-dimensional (3D) finite element calculations coupled with elasto-plastic material models. Firstly, a numerical procedure was developed to model the tunnelling process, the interaction between the shotcrete lining and the surrounding rock mass, and the interaction between the rock bolts and the surrounding rock mass. Then the variations of stresses and deformations in the existing shotcrete lining and rock bolts of an existing tunnel during the driving process of a new tunnel are investigated in detail using the developed numerical procedure. After that, the influences of the tunnel construction lengths, boundary conditions and meshes, and the relative position between the existing and new tunnels on the calculated results are discussed. Finally, the obtained results are qualitatively compared with Yamaguchi et al.'s (1998) observations on the closely running subway tunnels in Kyoto city and good agreements are found between them if the relatively high regional stresses in the Sydney region are taken into account. Throughout this study, the following conclusions can be drawn:

(1) The numerical procedure developed in this study can be used to investigate the effect of tunnelling on the existing support system taking into account the presence of the preceding tunnel as well as its support system, the tunnelling process, the interaction between shotcrete lining and rock mass, the interaction between rock bolts and rock mass, and the elasto-plastic behaviour of the rock mass, the shotcrete lining and the rock bolts.
(2) The driving of a new tunnel affects the existing support system of the adjacent tunnel. The effect is significant when the advancing tunnel face passes the existing support system and is minor when the face is far from it. Moreover, because of the presence of the existing tunnel, the existing support system located on the side closest to the new tunnel is more significantly affected by the driving of the new tunnel than that on the side opposite to the new tunnel.
(3) When the new tunnel is driven horizontally parallel to the existing tunnel with a sufficient separation in a region such as Sydney with relatively high horizontal regional stresses, the driving of the new tunnel will not cause significant adverse effects on the existing support system since both the tensile stress on the existing shotcrete lining located on the sides of the preceding tunnel and the compressive stress at the crown decrease although noticeable tensile stress increments are observed on some parts of the existing rock bolts.
(4) The effect of tunnelling on the existing support system strongly depends on the position between the existing and new tunnels. In terms of the stress increments on the existing support system, especially the maximum tensile stress increments on the existing shotcrete lining, the driving of the new tunnel causes increasingly adverse effects on the existing support system in a sequence of (i) horizontally parallel tunnels with a separation of 30 m, (ii) horizontally parallel tunnels with a separation of 20 m, (iii) staggered tunnels with a separation of 30 m, (iv) vertically aligned tunnels, and (v) staggered tunnels with a separation of 20 m among all of the cases investigated in this study.

Acknowledgement

The study presented in this paper forms part of a research project "Effects of tunnelling on existing support systems" funded by the Australian Research Council (ARC). The financial support from the ARC is greatly appreciated.

References

ABAQUS, 2001. ABAQUS/Standard User's Manual. Hibbitt, Karlsson & Sorensen, Inc.
Addenbrooke, T.I., Potts, D.M., Puzrin, A.M., 1997. The influence of pre-failure soil stiffness on the numerical analysis of tunnel construction. Geotechnique 47 (3), 693–712.
Asano, T., Ishihara, M., Kiyota, Y., Kurosawa, H., Ebisu, S., 2003. An observational excavation control method for adjacent mountain tunnels. Tunnelling and Underground Space Technology 18, 291–301.
Attewell, P.B., Woodman, J.P., 1982. Predicting the dynamics of ground settlement and its deriving caused by tunnelling in soil. Ground Engineering 15 (7), 13–22.
Augarde, C.E., Burd, H.J., 2001. Three-dimensional finite element analysis of lined tunnels. International Journal for Numerical and Analytical Methods in Geomechanics 25, 243–262.
Bernat, S., Cambou, B., 1998. Soil-structure interaction in shield tunnelling in soft soil. Computers and Geotechnics 22 (3/4), 221–242.
Branagan, D.F., 1985. An overview of the geology of the Sydney region. In: Pells, P. (Ed.), Engineering Geology of the Sydney Region. Balkema, Rotterdam, pp. 3–46.
Carranza-Torres, C., Fairhurst, C., 2000. Application of the convergence-confinement method of tunnel design to rock masses that satisfy the Hoek–Brown failure criterion. Tunnelling and Underground Space Technology 15 (2), 187–213.
Chen, L.T., Poulos, H.G., Loganathan, N., 1999. Pile responses caused by tunnelling. Journal of Geotechnical and Geoenvironmental Engineering 125 (3), 207–215.
Curran, J.H., Hammah, R.E., Yacoub, T.E., 2003. A two-dimensional approach for designing tunnel support in weak rock. In: Proceedings of the 56th Canadian Geotechnical Conference, Winnepeg, Manitoba, Canada, October 2003, pp. 1–6.
Franzius, J.N. 2003. Behaviour of buildings due to tunnel induced subsidence. PhD Thesis. Imperial College of Science, Technology and Medicine, London, UK.
Galli, G., Grimaldi, A., Leonardi, A., 2004. Three-dimensional modelling of tunnel excavation and lining. Computers and Geotechnics 31, 171–183.
Gioda, G., Swoboda, G., 1999. Developments and applications of the numerical analysis of tunnels in continuous media. International

Journal for Numerical and Analytical Methods in Geomechanics 23, 1393–1405.

Karakus, M., Fowell, R.J., 2003. Effects of different tunnel face advance excavation on the settlement by FEM. Tunnelling and Underground Space Technology 18, 513–523.

Karakus, M., Fowell, R.J., 2005. Back analysis for tunnelling induced ground movements and stress redistribution. Tunnelling and Underground Space Technology 20, 514–524.

Lin, Y.T., 2004. Numerical study on the influence of tunnelling on the adjacent existing tunnel liner. MSc Thesis. National Central University, Taiwan, China (in Chinese).

Liu, H.Y., Small, J.C., Carter, J.P., 2007. Three-dimensional (3D) modelling for effects of tunnelling on existing support systems. In: Proceedings of the Tenth International Symposium on Numerical Models in Geomechanics, Rhodes, Greece, April 25–27, 2007, pp. 373–379.

Loganathan, N., Poulos, H.G., 1998. Analytical prediction for tunnelling-induced ground movements in clays. Journal of Geotechnical and Geoenvironmental Engineering 124 (9), 846–856.

Mroueh, H., Shahrour, I., 2002. Three-dimensional finite element analysis of the interaction between tunnelling and pile foundations. International Journal for Numerical and Analytical Methods in Geomechanics 26, 217–230.

Mroueh, H., Shahrour, I., 2003. A full 3-D finite element analysis of tunnelling-adjacent structures interaction. Computers and Geotechnics 30, 245–253.

O'Reilly, M.P., New, B.M., 1982. Settlements above tunnels in the United Kingdom – their magnitude and prediction. Tunnelling'82. The Institution of Mining and Metallurgy, London, pp. 55–64.

Ostrava, J.M., 1997. Mathematical modelling of rock bolt systems I. Applications of Mathematics 43 (6), 413–438.

Panet, M., Guenot, A., 1982. Analysis of convergence behind the face of a tunnel. Tunnelling'82. The Institute of Mining and Metallurgy, London, pp. 197–204.

Peck, R.B., 1969. Deep excavations and tunnelling in soft ground. In: Proceedings of the 7th International Conference on Soil Mechanics and Foundation Engineering, State of the Art Volume, vol. 3. Mexican Society of Soil Mechanics, Mexico, pp. 225–290.

Pells, P.J.N., 2002. Developments in the design of tunnels and caverns in the Triassic rocks of the Sydney region. International Journal of Rock Mechanics and Mining Sciences 39, 569–587.

Potts, D.M., Zdravkovic, L., 2001. Finite Element Analysis in Geotechnical Engineering Application. Thomas-Telford, London, p. 427.

Potts, D.M., 2003. Numerical analysis: a virtual dream or practical reality. Geotechnique 53 (6), 535–573.

Sagaseta, C., 1987. Analysis of undrained soil deformation due to ground loss. Geotechnique 37, 301–320.

Swoboda, G., 1979. Finite element analysis of the New Austrian Tunnelling Method (NATM). In: Proceedings of the 3rd International Conference on Numerical Methods in Geomechanics, Aachen, vol. 2, pp. 581–586.

Swoboda, G., Abu-Krisha, A., 1999. Three-dimensional numerical modelling for TBM tunnelling in consolidated clay. Tunnelling and Underground Space Technology 14 (3), 327–333.

Tsuchiyama, S., Hayakawa, M., Shinokawa, T., Konno, H., 1988. Deformation behaviour of the tunnel under the excavation of crossing tunnel. In: Proceedings of the 6th International Conference on Numerical Methods in Geomechanics, Innsbruck, pp. 1591–1596.

Yamaguchi, I., Yamazaki, I., Kiritani, Y., 1998. Study of ground-tunnel interactions of four shield tunnels driven in close proximity, in relation to design and construction of parallel shield tunnels. Tunnelling and Underground Space Technology 13 (3), 289–304.