Computers and Geotechnics **4** (1987) 21–42

ANALYSIS OF PUMPING A COMPRESSIBLE PORE FLUID FROM A SATURATED ELASTIC HALF SPACE

J.P. Carter and J.R. Booker
School of Civil and Mining Engineering
University of Sydney
N.S.W. 2006 AUSTRALIA

ABSTRACT

A solution method is presented for the consolidation of a saturated, porous elastic half space due to the pumping of a pore fluid at a constant rate from a point sink embedded beneath the surface. It is assumed that the saturated medium is homogeneous and isotropic with respect to both its elastic and flow properties. The soil skeleton is modelled as an isotropic, linear elastic solid obeying Hooke's Law while the pore fluid is assumed to be compressible with its flow governed by Darcy's Law. The solution has been evaluated for a soil with a value of Poisson's ratio of 0.25 and for a number of different cases of pore fluid compressibility. It is demonstrated that this compressibility can have a significant influence on the rate of consolidation around the sink. The solutions presented may have application in practical problems such as the extraction of groundwater and other fluids from compressible geological media.

1. INTRODUCTION

To remove pore fluid from the ground it is necessary to use a pump to reduce the pressure in the pore fluid in its vicinity. This establishes hydraulic gradients and causes flow of the pore fluid towards the pump. One consequence of the reduction of fluid pressure in the saturated ground is an increase in the compressive effective stress state, and this will cause consolidation of the surrounding material and may lead to large scale subsidence. In very many cases the decrease in pore pressure will not occur immediately after pumping, but will decrease gradually below its initial in situ value until eventually a steady state distribution is reached. Hence the resultant consolidation and surface subsidence will be time dependent.

Computers and Geotechnics 0266-352X/87/$03·50

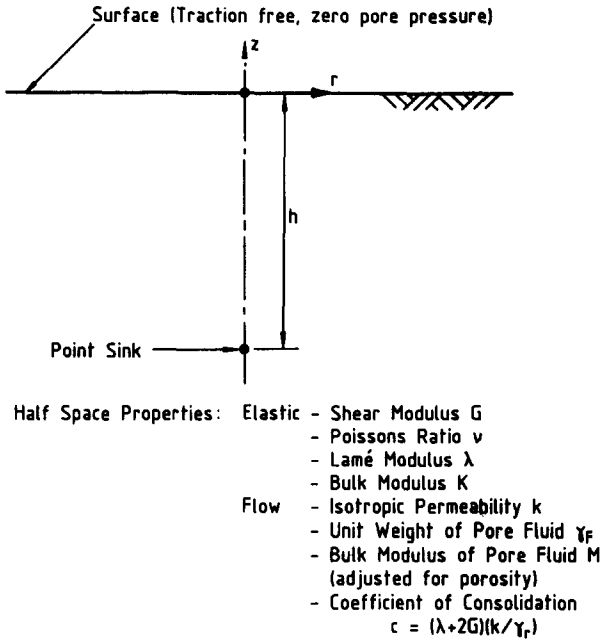

Figure 1
Problem Definition

Probably the best known examples of this phenomenon occur in Bangkok, Venice and Mexico City where widespread subsidence has been caused by withdrawal of water from aquifers for industrial and domestic purposes (e.g. Scott, 1978). However, the problem is not caused exclusively by the extraction of groundwater; the withdrawal of petroleum, air and gas can also induce surface subsidence (e.g. Bear and Pinder, 1978). In the latter cases the presence of trapped and dissolved gases in the pore fluid may render invalid the usual assumption of an incompressible pore fluid in the theory of consolidation.

The purpose of this paper is to provide the complete solution for the transient effects of pumping fluid from a point sink in a saturated, isotropic elastic half space. In particular the effect of pore fluid compressibility is included in the analysis in order to determine its influence on the consolidation process. The problem of an incompressible pore fluid was dealt within a previous paper (Booker and Carter, 1986). The problem solved here is defined in Figure 1. For the sake of simplicity the pump is treated as a point sink and it is assumed that the half space remains saturated with the water table always at the surface. Thus it is assumed that the half space is continually being recharged with pore fluid to make up for the pore fluid extracted from the sink. In obtaining the

solution proper account has been taken of the coupling of the pore fluid flow with the deformation of the solid skeleton.

The point sink problem treated here is of course an extreme idealisation of most real situations. Nevertheless, the solution does allow an uncluttered look at the basic physical processes in operation in this type of problem and provides an assessment of the likely severity of various effects, e.g. pore fluid compressibility. An additional benefit of the solution presented here is its potential use as a Green's function in numerical analysis (e.g., using the boundary element method) of problems with more complicated boundary and initial conditions.

2. GOVERNING EQUATIONS

The equations governing the consolidation of a poroelastic medium were first developed by Biot (1941a, 1941b). A variety of numerical schemes have since been proposed for the solution of these equations, and some even allow the incorporation of a compressible pore fluid, e.g. Ghaboussi and Wilson (1973). Our aim here is to provide a solution for the point sink problem in closed form, with the evaluation of the solution requiring only some simple numerical integration.

When expressed in terms of a cartesian coordinate system Biot's equations take the following forms.

2.1 Equilibrium

In the absence of any increase in body forces the equations of equilibrium can be written as

$$\partial \sigma = 0 \tag{1}$$

where $$\partial = \begin{bmatrix} \partial/\partial x & 0 & 0 & \partial/\partial y & 0 & \partial/\partial z \\ 0 & \partial/\partial y & 0 & \partial/\partial x & \partial/\partial z & 0 \\ 0 & 0 & \partial/\partial z & 0 & \partial/\partial y & \partial/\partial x \end{bmatrix}$$

$$\sigma^T = (\sigma_{xx}, \sigma_{yy}, \sigma_{zz}, \sigma_{xy}, \sigma_{yz}, \sigma_{zx})$$

is the vector of total stress components with tensile normal stress regarded as positive (these quantities represent the increase over the initial state of stress).

2.2 Strain-Displacement Relations

The strains are related to the displacement as follows

$$\epsilon = \partial^T u \qquad (2)$$

where $\epsilon^T = (\epsilon_{xx}, \epsilon_{yy}, \epsilon_{zz}, \gamma_{xy}, \gamma_{yz}, \gamma_{zx})$

is the vector of strain components of the soil skeleton, and

$u^T = (u_x, u_y, u_z)$ is the vector of cartesian displacement components of the solid skeleton.

2.3 Effective Stress Principle

It is assumed for the saturated soil that the effective stress principle is valid, i.e.

$$\sigma = \sigma'' - pa \qquad (3)$$

where

$\sigma'' = (\sigma_{xx}'', \sigma_{yy}'', \sigma_{zz}'', \sigma_{xy}, \sigma_{yz}, \sigma_{zx})^T$
is the vector of effective stress increments, (these quantities represent the increase over the initial state of effective stress)

$a^T = (1,1,1,0,0,0,)$

and p is the excess pore fluid pressure.

2.4 Hooke's Law

The constitutive behaviour of the solid phase (the skeleton) of the saturated medium is governed by Hooke's Law, which is

$$\sigma'' = D\,\epsilon \qquad (4)$$

where

$$D = \begin{bmatrix} \lambda+2G & \lambda & \lambda & 0 & 0 & 0 \\ & \lambda+2G & \lambda & 0 & 0 & 0 \\ & & \lambda+2G & 0 & 0 & 0 \\ & & & G & 0 & 0 \\ & & & & G & 0 \\ \text{symmetric} & & & & & G \end{bmatrix}$$

with λ and G the Lamé modulus and shear modulus, of the isotropic soil skeleton, respectively.

The moduli λ, G can be expressed in terms of the more familiar Young's modulus, E and Poisson's ratio υ of the skeleton, by the relations:

$$\lambda = \frac{E\upsilon}{(1 - 2\upsilon)(1 + \upsilon)}$$

$$G = \frac{E}{2(1 + \upsilon)}$$

2.5 Darcy's Law

It will be assumed that the flow of pore water is governed by Darcy's law, which for an isotropic soil takes the form:

$$\mathbf{v} = -\frac{k}{\gamma_F}\nabla p \qquad (5)$$

where k is the coefficient of permeability, γ_F is the unit weight of pore fluid and the z coordinate direction is aligned vertically and **v** is the superficial velocity vector of the pore fluid relative to the solid skeleton.

2.6 Displacement Equations

If Hooke's Law (4) and the equations of equilibrium (1) are combined it is found that

$$G\,\nabla^2\mathbf{u} + (\lambda + G)\,\nabla\epsilon_v = \nabla p \qquad (6)$$

where $\epsilon_v = \epsilon_{xx} + \epsilon_{yy} + \epsilon_{zz}$

is the volume strain. This equation can be condensed to give the useful relation

$$(\lambda + 2G)\,\nabla^2\epsilon_v = \nabla^2 p \qquad (7)$$

2.7 The Volume Constraint Equation

If the skeletal material is incompressible but the pore fluid is compressible then the volume change of any element of soil must balance the difference

between the volume of fluid leaving and entering the element by flow across its boundaries plus the volume of fluid extracted from the element by some internal sink mechanism and any change in the volume of pore fluid. Symbolically this continuity condition may be expressed as the volume constraint equation, i.e.

$$\int_0^t \nabla^T v \, dt + \epsilon_v + \frac{p}{M} = - \int_0^t q \, dt \qquad (8)$$

where q is the volume of fluid extracted per unit volume per unit time from the porous material by the sink mechanism and M is the bulk modulus (adjusted for porosity) of the pore fluid.

If equation (8) is combined with Darcy's Law, equation (5), and Laplace transforms are taken of the resulting equation, we find that

$$\frac{k}{\gamma_F} \nabla^2 \bar{p} = s(\bar{\epsilon}_v + \frac{\bar{p}}{M}) + \bar{q} \qquad (9)$$

or

$$c \, \nabla^2 \bar{p} = (\lambda + 2G)[s(\bar{\epsilon}_v + \frac{\bar{p}}{M}) + \bar{q}] \qquad (10)$$

where

$$c = k(\lambda + 2G)/\gamma_F$$

is the coefficient of consolidation of the saturated porous elastic medium.

The superior bar is used here to indicate a Laplace transform, i.e.

$$\bar{f}(s) = \int_0^\infty f(t) \, e^{-st} \, dt \qquad (11)$$

3. SOLUTION METHOD

In proceeding to the solution of the equations of consolidation for the case of a point sink embedded in a saturated elastic half space, we introduce triple Fourier transforms of the type

$$P^*(\alpha,\beta,\gamma) = (1/2\pi)^3 \int_{-\infty}^{\infty} \int_{-\infty}^{\infty} \int_{-\infty}^{\infty} e^{-i(\alpha x + \beta y + \gamma z)} p(x,y,z) \, dx dy dz \qquad (12a)$$

The corresponding inversion formula is

$$p(x,y,z) = \int_{-\infty}^{\infty}\int_{-\infty}^{\infty}\int_{-\infty}^{\infty} e^{+i(\alpha x+\beta y+\gamma z)}\ P^*(\alpha,\beta,\gamma)\,d\alpha d\beta d\gamma \tag{12b}$$

Use will also be made of double Fourier transforms of the type

$$P(\alpha,\beta,z) = (1/2\pi)^2 \int_{-\infty}^{\infty}\int_{-\infty}^{\infty} e^{-i(\alpha x+\beta y)}\ p(x,y,z)\,dxdy \tag{13a}$$

and the corresponding inversion formula

$$p(x,y,z) = \int_{-\infty}^{\infty}\int_{-\infty}^{\infty} e^{i(\alpha x+\beta y)}\ P(\alpha,\beta,z)\,d\alpha d\beta \tag{13b}$$

If we compare equations (12, 13) we see that

$$P^*(\alpha,\beta,\gamma) = (1/2\pi)\int_{-\infty}^{\infty} e^{-i\gamma z}\ P(\alpha,\beta,z)\,dz \tag{14a}$$

and conversely

$$P(\alpha,\beta,z) = \int_{-\infty}^{\infty} e^{+i\gamma z}\ P^*(\alpha,\beta,\gamma)\,d\gamma \tag{14b}$$

Sometimes it will be convenient to introduce the coordinates (ρ, ϵ) where

$$\begin{aligned} \alpha &= \rho\cos\epsilon \\ \beta &= \rho\sin\epsilon \end{aligned} \tag{15}$$

in which case equations (13b) become, for polar coordinates (r,θ,z),

$$p(r,\theta,z) = \int_0^{\infty}\int_0^{2\pi} e^{i\rho r\cos(\theta-\epsilon)}\ P\ \rho d\rho d\epsilon \tag{16}$$

Quite often the transform P will be able to be represented in the form

$$P = \cos n(\theta-\epsilon)\ F(\rho,z) \tag{17}$$

and thus

$$p = 2\pi i^n \int_0^{\infty} \rho F(\rho,z)\ J_n(\rho r)\,d\rho \tag{18}$$

where J_n represents the Bessel function of order n.

In the analysis which follows solutions for the equations of consolidation are found in terms of the Laplace transforms of the triple Fourier Transforms of the field quantities. Partial inversion of the triple Fourier transforms is then carried out in closed form using equation (14) or (18) and the inversion is completed using a single numerical integration. This leaves us with the Laplace transforms of the field quantities which in turn are inverted numerically using the technique developed by Talbot (1979), giving the time-dependent field quantities.

The complete solution for a point source embedded in a half space is built up by first considering the case of a point sink in an infinite medium and then the case of a half space with no sink. The solutions for these problems are given in the following sections.

4. SOLUTION FOR A POINT SINK

Let us consider a sink of strength F_k located at the point (x_k, y_k, z_k) within an infinite medium, so that

$$q = F_k \delta(x - x_k)\ \delta(y - y_k)\ \delta(z - z_k) \tag{18}$$

where δ indicates the Dirac delta function. We introduce triple transforms having the form of equation (12a) and thus we see, for example, that the transform of q is

$$Q^* = \frac{F_k}{(2\pi)^3}\ e^{-i(\alpha x_k + \beta y_k + \gamma z_k)} \tag{19}$$

It will be convenient for our purposes to write this in the form

$$Q^* = \frac{Q}{2\pi}\ e^{-i\gamma z_k} \tag{20}$$

where $\quad Q = \dfrac{F_k}{(2\pi)^2}\ e^{-i(\alpha x_k + \beta y_k)}$

4.1 Displacement Equations

In terms of triple transforms the displacement equations (6) become

$$-\ G\ D^2 U_x^* + (\lambda + G)\, i\alpha E_v^* = i\alpha P^*$$

$$
\begin{aligned}
-G\,D^2U_y^* + (\lambda + G)\,i\beta E_v^* &= i\beta P^* \\
-G\,D^2U_z^* + (\lambda + G)\,i\gamma E_v^* &= i\gamma P^* \\
i\alpha U_x^* + i\beta U_y^* + i\gamma U_z^* &= E_v^*
\end{aligned}
\tag{21}
$$

where $D^2 = \alpha^2 + \beta^2 + \gamma^2$, and

$$(U_x^*,\ U_y^*,\ U_z^*,\ P^*,\ E_v^*) =$$

$$(1/2\pi)^3 \int_{-\infty}^{\infty}\int_{-\infty}^{\infty}\int_{-\infty}^{\infty} e^{-i(\alpha x + \beta y + \gamma z)}\ (u_x,\ u_y,\ u_z,\ p,\ \epsilon_v)\ dxdydz$$

Equations (21) have the solution

$$
\begin{aligned}
U_x^* &= -\left(\frac{i\alpha}{D^2}\right)E_v^* \\
U_y^* &= -\left(\frac{i\beta}{D^2}\right)E_v^* \\
U_z^* &= -\left(\frac{i\gamma}{D^2}\right)E_v^* \\
P^* &= (\lambda + 2G)E_v^*
\end{aligned}
\tag{22}
$$

4.2 Volume Constraint Equation

In terms of the transforms equation (10) becomes

$$-cD^2\overline{E}_v^* = s\overline{E}_V^*\left[1 + \left(\frac{\lambda + 2G}{M}\right)\right] + \overline{Q}^* \tag{23}$$

If we now introduce the variables

$$\mu^2 = \rho^2 + s\left[1 + \left(\frac{\lambda + 2G}{M}\right)\right]/c$$

$$\rho^2 = \alpha^2 + \beta^3$$

we see that

$$\overline{E}_v^* = \frac{-\overline{Q}^*}{c(\gamma^2 + \mu^2)} \tag{24}$$

4.3 Stress Components

The stress components may be obtained directly from Hooke's Law, equations (4), and so

$$
\begin{aligned}
S^*_{xx} &= 2G\left(\frac{\alpha^2}{D^2} - 1\right)E^*_v \\
S^*_{yy} &= 2G\left(\frac{\beta^2}{D^2} - 1\right)E^*_v \\
S^*_{zz} &= 2G\left(\frac{\gamma^2}{D^2} - 1\right)E^*_v = -2G\,\frac{\rho^2}{D^2}\,E^*_v \\
S^*_{xy} &= 2G\,\frac{\alpha\beta}{D^2}\,E^*_v \\
S^*_{yz} &= 2G\,\frac{\beta\gamma}{D^2}\,E^*_v \\
S^*_{zx} &= 2G\,\frac{\alpha\gamma}{D^2}\,E^*_v
\end{aligned}
\tag{25}
$$

where $S^*_{jk} = (1/2\pi)^3 \int_{-\infty}^{\infty}\int_{-\infty}^{\infty}\int_{-\infty}^{\infty} e^{-i(\alpha x + \beta y + \gamma z)}\sigma_{jk}\,dx\,dy\,dz$

and j, k denote any of the indices x, y, z.

4.4 Partial Inversion

All the field quantities determined in this section can be expressed in terms of the three functions H^*, K^*, L^* where

$$\bar{H}^* = \left(\frac{1}{2\pi}\right)\frac{e^{-i\gamma z_k}}{\gamma^2 + \mu^2} \tag{26a}$$

$$
\begin{aligned}
\bar{K}^* &= \left(\frac{1}{2\pi}\right)\frac{e^{-i\gamma z_k}}{(\gamma^2 + \mu^2)D^2} \\
&= \frac{1}{2\pi(\mu^2 - \rho^2)}\left[-\frac{e^{-i\gamma z_k}}{\gamma^2 + \mu^2} + \frac{e^{-i\gamma z_k}}{\gamma^2 + \rho^2}\right]
\end{aligned}
\tag{26b}
$$

$$\bar{L}^* = \left(\frac{1}{2\pi}\right) \frac{i\gamma e^{-i\gamma z_k}}{(\gamma^2 + \mu^2)D^2}$$

$$= \frac{1}{2\pi(\mu^2 - \rho^2)} \left[- \frac{i\gamma e^{-i\gamma z_k}}{\gamma^2 + \mu^2} + \frac{i\gamma e^{-i\gamma z_k}}{\gamma^2 + \rho^2}\right] \tag{26c}$$

Now for the double Fourier transforms

$$(\bar{H}, \bar{K}, \bar{L}) = \int_{-\infty}^{\infty} e^{i\gamma z} (\bar{H}^*, \bar{K}^*, \bar{L}^*) \, d\gamma$$

and it can be shown (see Appendix) that

$$\bar{H} = \frac{1}{2} \frac{e^{-\mu Z}}{\mu} \tag{27a}$$

$$\bar{K} = \frac{1}{2(\mu^2 - \rho^2)} \left[\frac{e^{-\rho Z}}{\rho} - \frac{e^{-\mu Z}}{\mu}\right] \tag{27b}$$

$$\bar{L} = \frac{\mathrm{sgn}(z_k - z)}{2(\mu^2 - \rho^2)} \left[\frac{e^{-\rho Z}}{\rho} - \frac{e^{-\mu Z}}{\mu}\right] \tag{27c}$$

where $Z = |z - z_k|$

Thus on combining equations (13a, 22, 25, 27) we have

$$\begin{aligned}
i\bar{U}_x &= -\alpha \bar{K} \bar{Q}/c \\
i\bar{U}_y &= -\beta \bar{K} \bar{Q}/c \\
\bar{U}_z &= \bar{L} \bar{Q}/c \\
\bar{P} &= -(\lambda + 2G) \bar{H} \bar{Q}/c \\
\bar{S}_{xx} &= -2G(\alpha^2\bar{K} - \bar{H}) \bar{Q}/c \\
\bar{S}_{yy} &= -2G(\beta^2\bar{K} - \bar{H}) \bar{Q}/c \\
\bar{S}_{zz} &= 2G \rho^2\bar{K} \bar{Q}/c \\
\bar{S}_{xy} &= -2G \alpha\beta\bar{K} \bar{Q}/c \\
i\bar{S}_{yz} &= -2G \beta \bar{L} \bar{Q}/c \\
i\bar{S}_{zx} &= -2G \alpha \bar{L} \bar{Q}/c
\end{aligned} \tag{28}$$

5. SOLUTION FOR A HALF SPACE WITH NO SINK

To analyse this problem we introduce double Fourier transforms leading to representations of the form given by equation (13b). It will also be useful to introduce auxiliary quantities:

$$\begin{aligned} U_\xi &= \cos\epsilon\, U_x + \sin\epsilon\, U_y \\ U_\eta &= -\sin\epsilon\, U_x + \cos\epsilon\, U_y \\ S_{\xi z} &= \cos\epsilon\, S_{xz} + \sin\epsilon\, S_{yz} \\ S_{\eta z} &= -\sin\epsilon\, S_{xz} + \cos\epsilon\, S_{yz} \end{aligned} \tag{29}$$

where $\cos\epsilon = \dfrac{\alpha}{\rho}$

$\sin\epsilon = \dfrac{\beta}{\rho}$

5.1 Displacement Equations

In terms of these double transforms equations (6) become

$$G\left(\frac{\partial^2 U_\xi}{\partial z^2} - \rho^2 U_\xi\right) + (\lambda + G)\, i\rho \bar{E}_v = i\rho \bar{P} \tag{30a}$$

$$G\left(\frac{\partial^2 \bar{U}_\eta}{\partial z^2} - \rho^2 U_\eta\right) = 0 \tag{30b}$$

$$G\left(\frac{\partial^2 \bar{U}_z}{\partial z^2} - \rho^2 U_z\right) + (\lambda + 2G)\frac{\partial \bar{E}_v}{\partial z} = \frac{\partial \bar{P}}{\partial z} \tag{30c}$$

where

$$\bar{E}_v = \frac{\partial \bar{U}_z}{\partial z} + i\rho\, \bar{U}_\xi \tag{30d}$$

(In the problem considered here it is found that $U_\eta = 0$).

Equations (30) can be combined to give

$$(\lambda + 2G)\left[\frac{\partial^2 \bar{E}_v}{\partial z^2} - \rho^2 E_v\right] = \left[\frac{\partial^2 \bar{P}}{\partial z^2} - \rho^2 \bar{P}\right] \tag{31}$$

5.2 Volume Constraint Equation

Equation (10) becomes

$$c\left(\frac{\partial^2 \overline{P}}{\partial z^2} - \rho^2 \overline{P}\right) = (\lambda + 2G)\, s\left(\overline{E}_v + \frac{\overline{P}}{M}\right) \tag{32}$$

5.3 Solution

The solutions of equations (31, 32) which remain bounded as $z \to -\infty$ are:

$$\begin{aligned} \overline{E}_v &= Ae^{\mu z} + \left(\frac{2G}{\lambda + G}\right) \delta B e^{\rho z} \\ \overline{P} &= (\lambda + 2G)\, Ae^{\mu z} + 2GBe^{\rho z} \end{aligned} \tag{33}$$

where $\delta = -\left(\frac{\lambda + G}{M}\right)$

If we substitute equations (33) into equation (30c) we find

$$\frac{\partial^2 \overline{U}_z}{\partial z^2} - \rho^2 \overline{U}_z = \mu A e^{\mu z} + 2B\rho(1 - \delta)e^{\rho z}$$

and thus

$$\rho \overline{U}_z = \left(\frac{\mu\rho}{\mu^2 - \rho^2}\right) Ae^{\mu z} + \rho z B\,(1 - \delta)e^{\rho z} + Ce^{\rho z} \tag{34}$$

Furthermore, it is not difficult to show that

$$i\rho \overline{U}_\xi = \left(\frac{-\rho^2}{\mu^2 - \rho^2}\right) Ae^{\mu z} + B\left[\left(\frac{2G}{\lambda + G}\right)\delta - (1 + \rho z)(1 - \delta)\right]e^{\rho z} - Ce^{\rho z} \tag{35}$$

$$\frac{\overline{S}_{zz}}{2G} = \left(\frac{\rho^2}{\mu^2 - \rho^2}\right) Ae^{\mu z} + B\left[\left(\frac{2\lambda}{\lambda + G}\right)\delta - 1 + (1 - \delta)(1 + \rho z)\right]e^{\rho z} + Ce^{\rho z} \tag{36}$$

$$\frac{i\overline{S}_{\xi z}}{2G} = \left(\frac{-\rho\mu}{\mu^2 - \rho^2}\right) Ae^{\mu z} + B\left[\left(\frac{2G}{\lambda + G}\right)\delta - (1 - \delta)(1 + \rho z)\right]e^{\rho z} - Ce^{\rho z} \tag{37}$$

6. SOLUTION FOR A SINK IN A HALF SPACE

The solution to this problem can be synthesised by superimposing the solutions found in the previous sections. To do this it is convenient to introduce the following change of notation,

$$\begin{aligned} N &= S_{zz}/2G \\ T &= i S_{\xi z}/2G \\ U &= i U_{\xi} \\ W &= U_z \end{aligned} \tag{38}$$

The complete solution for the Laplace transforms of the double Fourier transforms can then be written in the form

$$\begin{bmatrix} \bar{N} \\ \bar{T} \\ \bar{P} \\ \bar{U} \\ \bar{W} \end{bmatrix} = -(\bar{Q}/c) \begin{bmatrix} \bar{N}_0 \\ \bar{T}_0 \\ \bar{P}_0 \\ \bar{U}_0 \\ \bar{W}_0 \end{bmatrix} + \begin{bmatrix} \bar{N}_1 & \bar{N}_2 & \bar{N}_3 \\ \bar{T}_1 & \bar{T}_2 & \bar{T}_3 \\ \bar{P}_1 & \bar{P}_2 & \bar{P}_3 \\ \bar{U}_1 & \bar{U}_2 & \bar{U}_3 \\ \bar{W}_1 & \bar{W}_2 & \bar{W}_3 \end{bmatrix} \begin{bmatrix} \bar{F}_1 \\ \bar{F}_2 \\ \bar{F}_3 \end{bmatrix} \tag{39}$$

where the functions N_0, T_0, ..., W_3 are specified in Table 1. The coefficients F_1, F_2, F_3 may be obtained from the boundary conditions, i.e. zero tractions and pore pressure at the surface of the half space, $z = 0$. Thus we have

$$\begin{bmatrix} \bar{N}_1 & \bar{N}_2 & \bar{N}_3 \\ \bar{T}_1 & \bar{T}_2 & \bar{T}_3 \\ \bar{P}_1 & \bar{P}_2 & \bar{P}_3 \end{bmatrix} \begin{bmatrix} \bar{F}_1 \\ \bar{F}_2 \\ \bar{F}_3 \end{bmatrix} = +(\bar{Q}/c) \begin{bmatrix} \bar{N}_0 \\ \bar{T}_0 \\ \bar{P}_0 \end{bmatrix} \tag{40}$$

where all of the coefficients in the above equation are evaluated at $z = 0$. Once the unknown coefficients F_1, F_2, F_3 have been found as the solution to equation (40), any of the transforms of the field quantities may be evaluated from equations (39). These solutions should be precisely the same independent of which alternative*, specified in Table 1, is used.

---

* Alternative 1 corresponds to a single sink at $z = -h$ in an unbounded medium while alternative 2 corresponds to a single sink and an image source placed at $z = +h$ in an unbounded medium.

TABLE 1

Transform	0 Alt. 1	0 Alt. 2	1	2	3
$\bar{N}$	$-\rho^2\bar{K}_b$	$-\rho^2(\bar{K}_b - \bar{K}_a)$	$\frac{\rho^2 e^{\mu z}}{\mu^2 - \rho^2}$	$e^{\rho z}$	$[(\frac{\lambda}{\lambda + G})\ \delta - 1 + (1 - \delta)(1 + \rho z)]e^{\rho z}$
$\bar{T}$	$\rho\bar{L}_b$	$\rho(\bar{L}_b - \bar{L}_a)$	$-\frac{\rho\mu e^{\mu z}}{\mu^2 - \rho^2}$	$-e^{\rho z}$	$[(\frac{G}{\lambda + G})\ \delta - (1 - \delta)(1 + \rho z)]e^{\rho z}$
$\bar{P}$	$(\lambda + 2G)\bar{H}_b$	$(\lambda + 2G)(\bar{H}_b - \bar{H}_a)$	$(\lambda + 2G)e^{\mu z}$	0	$2Ge^{\rho z}$
$\bar{U}$	$\rho\bar{K}_b$	$\rho(\bar{K}_b - \bar{K}_a)$	$-\frac{\rho}{\mu^2 - \rho^2}e^{\mu z}$	$-\frac{e^{\rho z}}{\rho}$	$\frac{1}{\rho}[(\frac{2G}{\lambda + G})\ \delta - (1 - \delta)(1 + \rho z)]e^{\rho z}$
$\bar{W}$	$-\bar{L}_b$	$-(\bar{L}_b - \bar{L}_a)$	$\frac{\mu}{\mu^2 - \rho^2}e^{\mu z}$	$\frac{e^{\rho z}}{\rho}$	$z(1 - \delta)e^{\rho z}$

where

$$\bar{H}_b = \frac{1}{2}\frac{e^{-\mu Z_b}}{\mu}, \quad \bar{H}_a = \frac{1}{2}\frac{e^{-\mu Z_a}}{\mu}$$

$$\bar{K}_b = \frac{1}{2(\mu^2 - \rho^2)}\left[\frac{e^{-\rho Z_b}}{\rho} - \frac{e^{-\mu Z_b}}{\mu}\right], \quad \bar{K}_a = \frac{1}{2(\mu^2 - \rho^2)}\left[\frac{e^{-\rho Z_a}}{\rho} - \frac{e^{-\mu Z_a}}{\mu}\right]$$

$$\bar{L}_b = \frac{\mathrm{sgn}(-h - z)}{2(\mu^2 - \rho^2)}\left[e^{-\rho Z_b} - e^{-\mu Z_b}\right], \quad \bar{L}_a = \frac{\mathrm{sgn}(h - z)}{2(\mu^2 - \rho^2)}\left[e^{-\rho Z_a} - e^{-\mu Z_a}\right]$$

$$Z_b = |z + h|, \quad Z_a = |z - h|$$

7. CALCULATION OF FIELD QUANTITIES

Expressions for N, T, P, U, W were developed in the previous section. It will be observed for a point sink that these are all functions of ρ. Thus we see from equation (18) that

$$(\bar{\sigma}_{zz}, \bar{p}, \bar{u}_z) = 2\pi \int_0^\infty \rho(\bar{N}, \bar{P}, \bar{W})\ J_0(\rho r)\,d\rho \tag{41}$$

Now we can easily establish that $U_\eta = 0$ and thus that

$$\bar{U}_x = \cos\epsilon\,\bar{U}_\xi$$

$$\bar{U}_y = \sin\epsilon\,\bar{U}_\xi$$

Thus the expressions for the Laplace transforms of displacement can be written as

$$\bar{u}_x = \int_{-\infty}^{\infty} \int_{-\infty}^{\infty} e^{i(\alpha x + \beta y)} \cos\epsilon \bar{U}_\xi(\rho) \, d\alpha d\beta$$

$$\bar{u}_y = \int_{-\infty}^{\infty} \int_{-\infty}^{\infty} e^{i(\alpha x + \beta y)} \sin\epsilon \bar{U}_\xi(\rho) \, d\alpha d\beta$$

and hence

$$\bar{u}_r = \int_0^{\infty} \int_0^{2\pi} e^{i\rho r \cos(\theta - \epsilon)} \cos(\theta - \epsilon) U_\xi(\rho) \rho \, d\epsilon \, d\rho \tag{42}$$

$$= 2\pi \int_0^{\infty} \rho \, J_1(\rho r) \, U(\rho) \, d\rho$$

It is not difficult to show that $u_\theta = 0$. Similarly we may show for the stresses that

$$\bar{\sigma}_{rz} = 2\pi \int_0^{\infty} \rho \, J_1(\rho r) \, \bar{T}(\rho) \, d\rho \tag{43}$$

$$\sigma_{\theta z} = 0$$

The single infinite integrals contained in equations (41-43) have been evaluated numerically, using Gaussian quadrature.

Evaluation of the field quantities is finally achieved by inversion of the appropriate Laplace transforms. As mentioned earlier, this is also done numerically, using the efficient algorithm developed by Talbot (1979).

8. RESULTS

The solutions have been evaluated for the particular case where the solid skeleton has a Poisson's ratio $\nu = 0.25$ and the results have been summarised in Figures 2, 3 and 4.

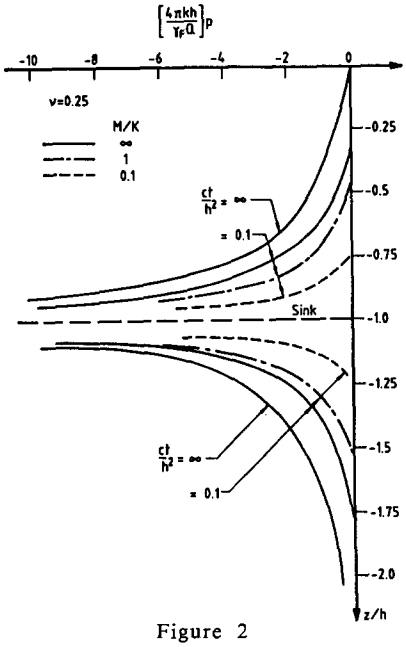

Figure 2

Isochrones of Excess Pore Pressure on the Vertical Axis for Times $ct/h^2 = 0.1$ and ∞

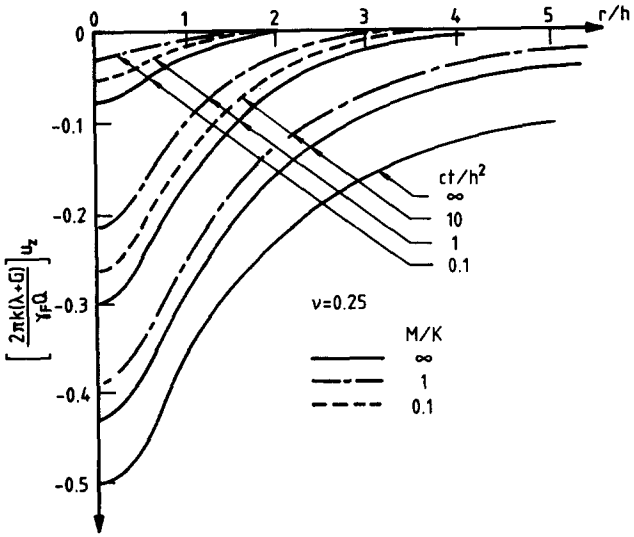

Figure 3

Isochrones of Surface Settlement

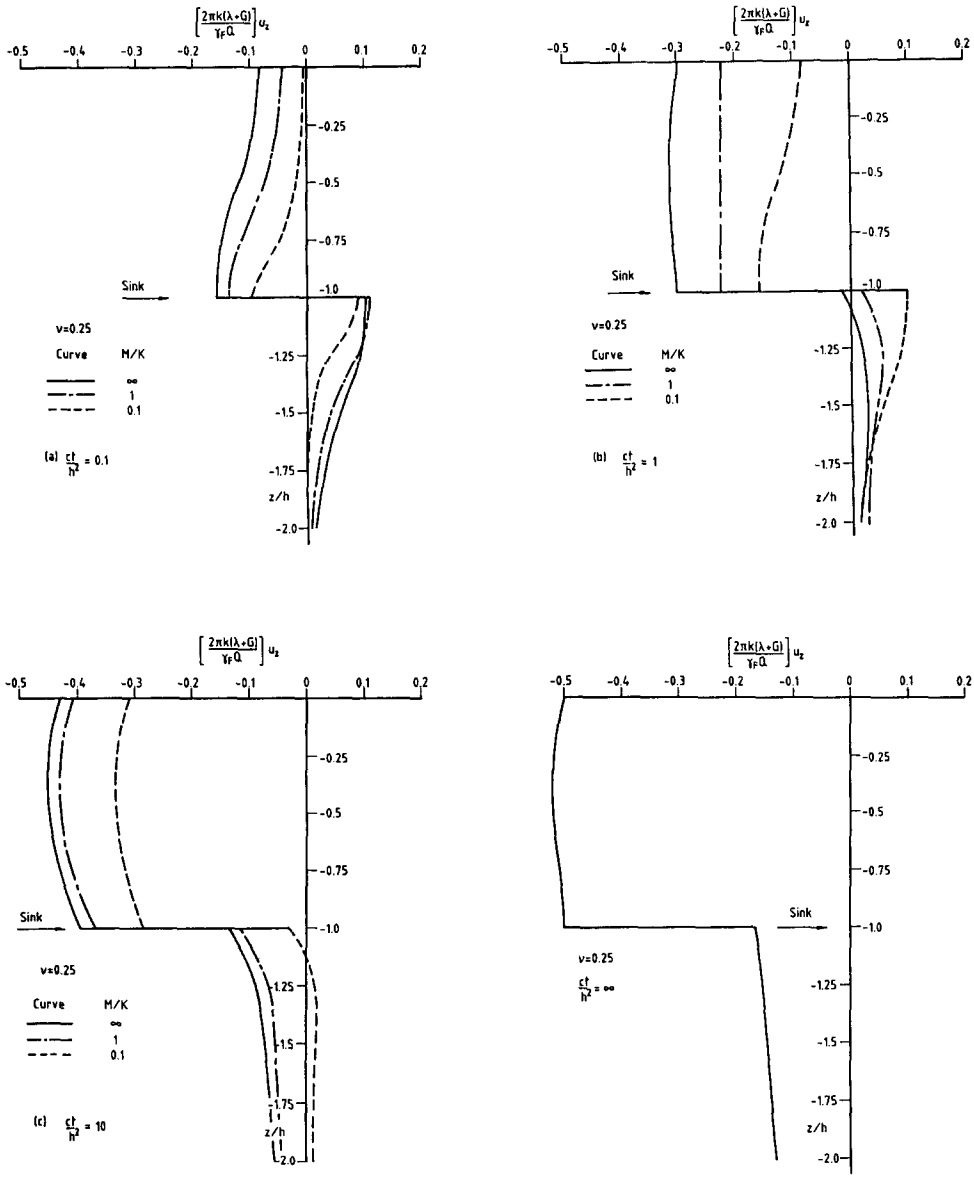

Figure 4

Vertical Displacements along the Vertical Axis
Containing the Sink

In discussing the effects of pore fluid compressibility it is convenient to define the relative compressibility as M/K where M is the bulk modulus (adjusted for porosity) of the pore fluid and K is the bulk modulus of the elastic solid skeleton, given by

$$K = \frac{E}{3(1 - 2\nu)}$$

Figure 2 shows isochrones of excess pore pressure on the vertical axis through the point sink for non-dimensional times $ct/h^2 = 0.1$ and ∞. The symbol t is used here to represent the elapsed time since the commencement of pumping. In all cases the changes in pore pressure due to pumping are actually suctions and this is indicated by the negative values of p. When the excess pore pressures are normalised as indicated in Figure 2 the steady state response (at $ct/h^2 = \infty$) is independent of the degree of compressibility of the pore fluid (i.e. M/K). Indeed it is possible to find a closed form expression for the excess pore pressure distribution at large time and this has been shown by the authors (Booker and Carter, 1986) to be

$$p = -\left(\frac{Q\gamma_F}{4\pi k}\right)\left[\frac{1}{\sqrt{r^2 + (z + h)^2}} - \frac{1}{\sqrt{r^2 + (z - h)^2}}\right] \qquad (41)$$

Along the axis r = 0, this of course reduces to

$$p = -\left(\frac{Q\gamma_F}{4\pi k}\right)\left[\frac{1}{|z + h|} - \frac{1}{|z - h|}\right] \qquad (42)$$

At intermediate times the normalised excess pore pressures along the axis are a function of the relative compressibility of the pore fluid M/K, as illustrated in Figure 2 for the time corresponding to $ct/h^2 = 0.1$. The results show that the more compressible the pore fluid, i.e. the smaller the value of M/K, then the slower is the development of the excess pore suctions and hence the slower will be the consolidation of the soil around the sink.

Typical results for surface displacement are indicated on Figure 3 where isochrones or vertical displacement have been plotted against radial distance from the vertical axis. The settlement values have been plotted in non-dimensional form and selected cases corresponding to M/K = 0.1, 1 and ∞ have been shown. It is obvious that the relative compressibility of the pore fluid has a marked influence on the time dependent surface settlements. Generally, the more compressible the pore fluid (i.e. smaller M/K), the slower is the movement. The rate of settlement

in a poroelastic half space for which $M/K = 0.1$ is more than 10 times slower than in a half space having an incompressible pore fluid ($M/K = \infty$).

The long term surface settlements are independent of the compressibility of pore fluid and it is perhaps worth noting their closed form expressions. For the general case the authors reported (Booker and Carter, 1986) that the vertical displacement of a point on the surface at large time is given by

$$u_z(r,o) = -\left[\frac{Q\gamma_F}{4\pi k(\lambda + G)}\right] \frac{1}{\sqrt{r^2 + h^2}} \qquad (43)$$

Solutions for the variation of vertical displacement along the vertical axis containing the point sink are shown in Figure 4, corresponding to non-dimensional times, $ct/h^2 = 0.1$, 1, 10 and ∞. Results have been plotted in non-dimensional form for the following cases: $M/K = 0.1$, 1 ∞. Again it is clear from this figure that the relative compressibility of the pore fluid has a significant influence on the rate of vertical displacement. Also noticeable on Figure 4 is the discontinuity in vertical displacement that occurs at all times at the location of the sink ($z/a = -1$). This is a mathematical singularity that arises from the assumption of a point sink; in reality the pump would have a finite size and for this case no singularity would arise. It is also notable that in the solution for a point sink the material beneath the sink moves upwards at early time, whereas at large times and at the steady state condition ($ct/a^2 = \infty$) the entire mass moves vertically downwards due to the pumping.

9. CONCLUSIONS

A solution has been found for the consolidation of a saturated elastic half space brought about by the commencement of pumping of the pore fluid from a sink embedded within the half space. The medium was assumed to be homogeneous and isotropic with a compressible pore fluid. The governing equations of the problem have been solved in Laplace transform space requiring the use of double and triple Fourier transforms. Inversion of some of these transforms has been carried out using numerical integration.

Some particular solutions have been evaluated for an elastic medium having a Poisson's ratio $\nu = 0.25$. These indicate that the compressibility of the pore fluid can have a significant influence on the rate of consolidation of the soil

surrounding the point sink and thus on the settlement of the surface of the half space. Generally the more compressible the pore fluid then the slower will be the development of excess pore suctions and hence the slower the rate of surface settlement.

The solutions presented may have application in practical problems such as dewatering operations in compressible soils and in the extraction of fluid and gas from petroleum bearing deposits. In such cases the time to reach steady state and the final profile of surface settlement could be of great interest.

10. REFERENCES

1. BEAR, J. and PINDER, G.F. (1978). Porous Medium Deformation in Multiphase Flow, J. Eng. Mech. Divn, ASCE, Vol. 104, EM4, pp. 881-894.

2. BIOT, M.A. (1941a). General Theory of Three Dimensional Consolidation, J. Appl. Physics, Vol. 12, No. 2, pp. 155-164.

3. BIOT, M.A. (1941b). Consolidation Settlement Under Rectangular Load Distribution, J. Appl. Physics, Vol. 12, No. 5, pp. 426-430.

4. BOOKER, J.R. and CARTER, J.P. (1986). Long Term Subsidence Due to Fluid Extraction from a Saturated, Anisotropic, Elastic Soil Mass. Q.J. Mechanics Applied Mathematics, Vol. 39, pp. 85-97.

5. BOOKER, J.R. and CARTER, J.P. (1986). Consolidation of a Saturated Elastic Half Space due to Fluid Extraction from a Point Sink, Proc. Int. Conf. on Compressibility Phenomena in Subsidence, Ed. S.K. Saxena, Henniker, New Hampshire, USA, July 29 - August 3, 1984.

6. GHABOUSSI, J. and WILSON, E.L. (1973). Flow of Compressible Fluid in a Porous Elastic Media, Int. J. Numerical Methods Engineering, Vol. 5, pp. 419-442.

7. SCOTT, R.G. (1978). Subsidence - A Review. Evaluation and Prediction of Subsidence, Ed. S.K. Saxena, ASCE, New York, pp. 1-25.

8. TALBOT, A. (1979). The Accurate Numerical Inversion of Laplace Transforms, J. Instit. Math. Applic., Vol. 23, pp. 97-120.

APPENDIX

The aim of this appendix is to verify the expressions for H, K, L contained in equations (27). We proceed as follows.

Let $$\varphi = \int_0^\infty e^{-i\gamma z} \frac{e^{-p|z|}}{2p} dz$$

where p has a positive real part. Then

$$\varphi = \int_0^\infty \cos\gamma z \frac{e^{-p|z|}}{p} dz = \frac{1}{p^2 + \gamma^2}$$

Thus using the Fourier Inversion Theorem

$$\frac{e^{-p|z|}}{2p} = \frac{1}{2\pi} \int_{-\infty}^{\infty} \frac{e^{i\gamma z}}{\gamma^2 + p^2} d\gamma$$

Also, let

$$\varphi = -\int_{-\infty}^{\infty} e^{-i\gamma z} \frac{\mathrm{sgn}(z)}{2} e^{-p|z|} dz$$

$$= \int_0^\infty i \sin \gamma z e^{-p|z|} dz$$

$$= \frac{i\gamma}{p^2 + \gamma_2}$$

Thus from the Fourier Inversion Theorem

$$-\frac{\mathrm{sgn}(z)}{2} e^{-p|z|} = \frac{1}{2\pi} \int_{-\infty}^{\infty} \frac{i\gamma}{p^2 + \gamma^2}$$

The results of equations (27) then follow.

Received 23 March 1987; revised version received and accepted 1 May 1987