TECHNICAL NOTES

Predictions of the non-homogeneous behaviour of clay in the triaxial test

J. P. CARTER, BE, PhD, MIEAust*

INTRODUCTION

In the triaxial test cylindrical samples of soil are subjected to controlled axial strain through rigid end platens and controlled radial stress through a rubber membrane. In this way, the specimen is subjected to a mixed set of displacement and stress controlled boundary conditions. If specimens of clay are tested, the hydraulic boundary conditions and the rate of loading also become important considerations. If undrained tests are to be carried out then movement of water across the boundaries of the specimen must be prohibited. If fully drained tests are to be performed, water must be allowed to pass across the boundaries and the sample must be strained at a sufficiently slow rate as to approximate closely the fully drained condition. The question of what is a sufficiently slow rate of straining has been discussed by Gibson & Henkel (1954) and is investigated further here.

Non-homogeneous behaviour of the triaxial specimen may result from the migration of pore water through the specimen and perhaps across its boundaries during testing. As the soil has a finite permeability, the rate of axial strain will also determine the degree of non-uniformity. Fast tests will produce a response observed externally (at the sample boundaries) similar to that in an ideal undrained test. Slow tests will behave as an ideal fully drained test should. At intermediate rates of strain different elements of soil within the sample may follow different stress paths. In an undrained test, although no overall change in volume may occur, individual elements of soil within the sample may expand or contract, and again different stress paths may be followed.

Some of the non-homogeneities occurring in triaxial specimens due to migration of pore water are discussed here. Calculations have been made to illustrate these effects. In all cases it has been assumed that the interface between the triaxial specimen and the rigid end platen is perfectly smooth. It has long been recognized that one source of non-homogeneous behaviour in the triaxial test has been the restraint on the specimen at its ends. Because the rubber membrane is usually sealed to the end platens, lateral expansion of the specimen is often restricted near the ends unless special precautions are taken.

Another form of non-homogeneity may occur as a result of unstable yielding of the triaxial specimen in which strains concentrate into slip bands. In all cases plastic yielding is stable throughout all regions of the specimen, i.e. on the wet side of the critical state line.

SOIL MODEL

In all the calculations reported here, one particular mathematical model has been adopted for the stress–strain behaviour of the soil. It is the work hardening model proposed by Roscoe & Burland (1968), called modified Cam clay, which is based on the critical state concepts (Schofield & Wroth, 1968). In order to perform computations which include the movement of pore water, values for six parameters must be completely specified

(*a*) λ: the gradient of the normal consolidation line in e–$\ln p'$ space
(*b*) κ: the mean gradient of the unloading–reloading cycle in e–$\ln p'$ space
(*c*) M: the critical state stress ratio q/p'
(*d*) e_{cs}: the position of the critical state line in e–$\ln p'$ space, i.e. the value of e at unit p'
(*e*) G: the elastic shear modulus
(*f*) k: the isotropic permeability coefficient.

The symbol e is used to represent the void ratio and the stress parameters p' and q are the mean effective stress and the deviator stress which are defined by

$$p' = \tfrac{1}{3}(\sigma_1' + 2\sigma_3')$$
$$q = \sigma_1 - \sigma_3$$
$$= \sigma_1' - \sigma_3'$$

where σ_1', σ_3' and σ_1, σ_3 are the major and minor components of effective and total stress, respectively. When performing calculations, it is also necessary to prescribe the in situ stress state of the soil specimen before triaxial shearing begins.

In order to be specific, values for the model parameters have been selected which are

Discussion on this Technical Note closes 1 June 1982. For further details see inside back cover.
* Department of Civil Engineering, University of Queensland.

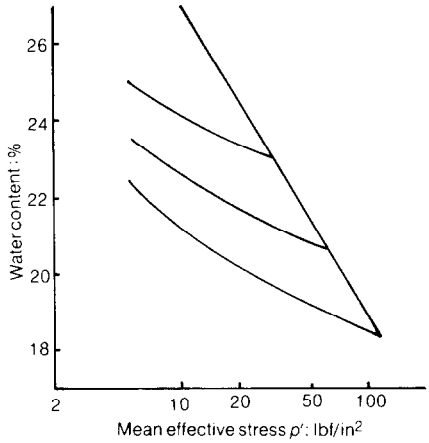

Fig. 1. Isotropic consolidation and swelling of remoulded Weald clay (after Henkel, 1959)

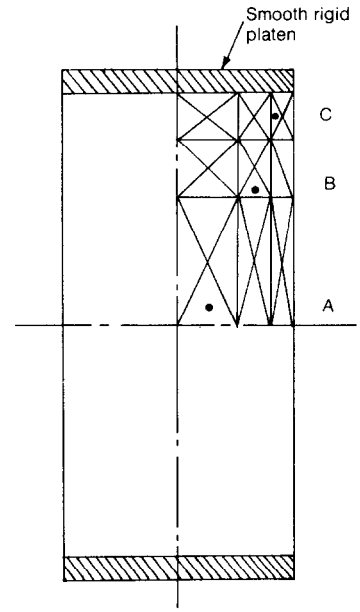

Fig. 2 (right). Finite element mesh

considered to be representative of Weald clay. These values have been obtained from data given by Bishop & Henkel (1962). Fig. 1 shows the results of isotropic consolidation and swelling of this clay in the triaxial apparatus. This plot yields three of the model parameters. The gradient of the consolidation lines gives $\lambda = 0{\cdot}088$, the gradient of the swelling line gives $\kappa = 0{\cdot}031$, and the value of the void ratio at unit pressure on the isotropic consolidation line is simply related to e_{cs} and gives $e_{cs} = 1{\cdot}0575$. The value of the elastic shear modulus G is $3000\,\mathrm{kN/m^2}$ and has been calculated from the initial response of an undrained triaxial test on the clay. However, this value has little influence on the final results as, in the case of normally consolidated clays, the plastic strains dominate the behaviour. A value of friction angle ϕ' was taken directly as quoted by Bishop & Henkel and $M = 0{\cdot}882$ was calculated using the formula

$$M = \frac{6 \sin \phi'}{3 - \sin \phi'} \qquad (1)$$

Bishop & Henkel quote a value for the coefficient of consolidation for Weald clay as $c_v = 4{\cdot}0 \times 10^{-7}\,\mathrm{m^2/min}$. Using this value of c_v and the relationship between the coefficient of compressibility m_v and λ, together with the relationship between m_v and c_v, the permeability may be determined as $k = 7{\cdot}6 \times 10^{-11}\,\mathrm{m/min}$ when the soil is consolidated under a mean effective stress of $p' = 207\,\mathrm{kN/m^2}$. In all of the calculations reported here, it has been assumed that before shearing each specimen has been consolidated under a mean effective stress of $207\,\mathrm{kN/m^2}$.

FINITE ELEMENT MODEL

The finite element technique was used for the calculations; the method of Small, Booker & Davis (1976) for the analysis of elastoplastic consolidation has been applied to the case of the work hardening soil model. In all calculations, the finite element mesh used is as indicated in Fig. 2, which shows a diametral section of the triaxial specimen; because of symmetry, it is necessary to consider only a quadrant of this plane. Each axisymmetric element is triangular in cross-section and contains six nodes: three at the vertices and three at the mid-sides. Within each element it is assumed that displacement and pore pressure are both (different) quadratic functions of the position co-ordinates (r, z). The ends of the specimen are considered to be perfectly rigid and smooth and on the cylindrical surface of each specimen the normal total stress is held constant at $207\,\mathrm{kN/m^2}$. The loading was defined by increasing in small increments the axial displacement of the rigid end platen at a specified rate of axial strain until general failure occurred in the specimen. Two different hydraulic boundary conditions were investigated: drainage permitted only at the end platens and drainage permitted from all faces.

TESTS ON WEALD CLAY AT FINITE RATE OF STRAIN

Calculations were performed for a number of tests; the rate of axial strain ε_1 was varied from test

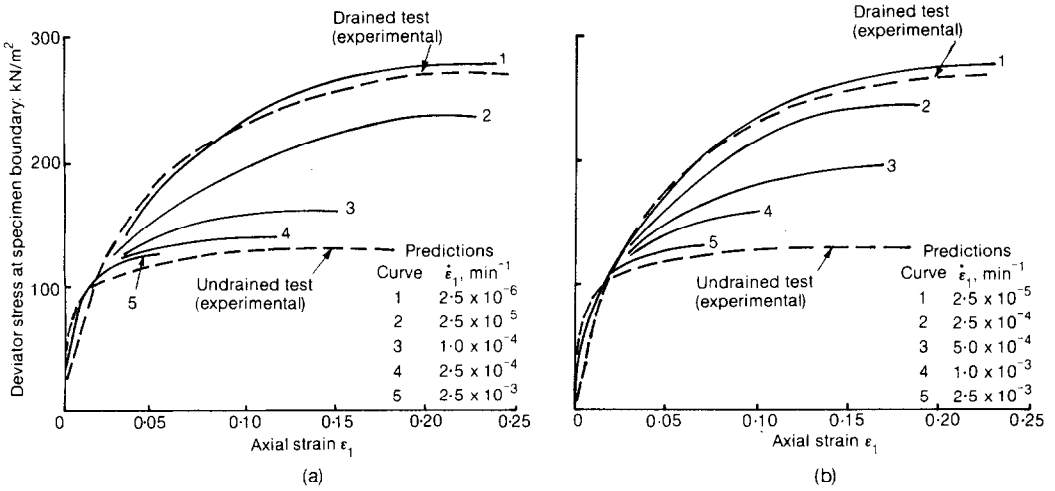

Fig. 3. Stress–strain curves for triaxial compression of Weald clay: (a) drainage from both ends only; (b) drainage from all faces

to test. The model parameters λ, κ, M, e_{cs}, G and k were adopted and the results of these calculations are summarized in Fig. 3 where the average deviator stress (as observed at the ends of the specimen) is plotted against the axial strain (determined from the movement of the platen boundaries). Fig. 3(a) shows the results for drainage permitted only at the end platens and Fig. 3(b) those for drainage permitted from all faces. Each stress–strain curve corresponds to a unique value of axial strain rate and is the prediction of what would be measured at the boundaries of the specimen. In both drainage cases the strength of the specimen decreases as the strain rate is increased. Also plotted in Fig. 3 are the experimentally determined stress–strain curves for Weald clay in an undrained and fully drained triaxial test. The experimental data have been reproduced from Bishop & Henkel (1962). For both drainage boundary conditions the predicted stress–strain curves lie in a well-ordered fashion within the region bounded closely by the experimental curves. As the loading rate is increased there is a transition from drained to undrained behaviour.

Predictions of the average values of deviator stress at failure are plotted against the rate of axial strain in Fig. 4. Both drainage cases are shown and again it can be seen that as the rate of straining is increased there is a transition between fully drained failure and undrained failure. As expected, fully drained behaviour is predicted for the case of drainage permitted from all faces at faster strain rates than for the case of drainage permitted only at the end platens. Good agreement between the predictions and the experimental results reported by Gibson & Henkel (1954) for the case of all round drainage is shown in Fig. 4.

The predictions of the stress paths followed by selected elements of soil during these tests is of some interest. Consider, for example, the intermediate case where the axial strain rate is $\dot{\varepsilon}_1 = 5 \times 10^{-4}\,\text{min}^{-1}$ and drainage is permitted from all faces. Three points within the specimen are considered; their locations are defined in Fig. 2. Stress and strain paths paths for soil at each of these points are shown in Fig. 5, where values for p', q, e and the shear strain $\varepsilon_1 - \varepsilon_3$ are local values,

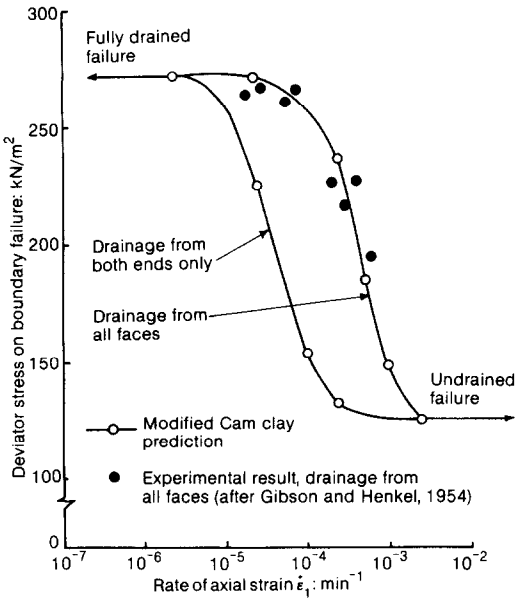

Fig. 4. Computed and measured strengths of Weald clay in triaxial compression

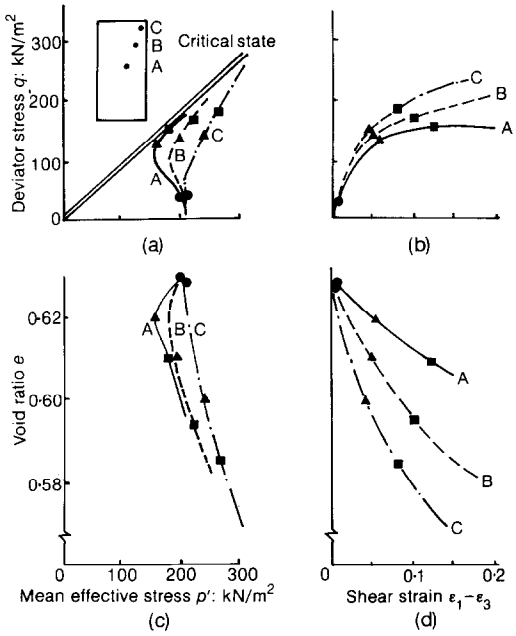

Fig. 5. Predicted test paths at various points in a triaxial specimen of Weald clay, $\dot{\varepsilon}_1 = 5 \times 10^{-4}\,\text{min}^{-1}$

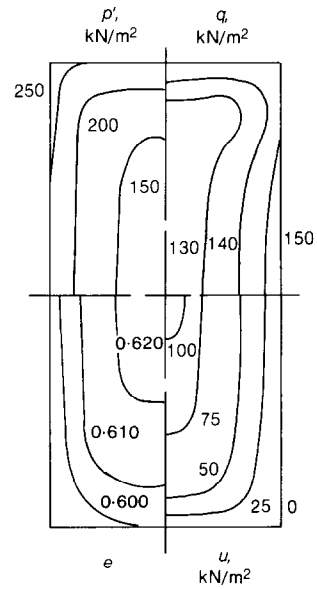

Fig. 6. Predicted contours of stress and void ratio at $\varepsilon_1 = 0{\cdot}05$ in a triaxial specimen of Weald clay

relevant to the appropriate point A, B or C within the specimen. Symbols on each curve are used to indicate the appropriate level of overall axial strain ε_1 that would be determined from the movement of the end platens. The calculations predict that the specimen behaves non-uniformly. In Fig. 5(b) the stress–strain curve for point B is fairly close to the average for the specimen which would be observed at the boundaries.

Non-uniformity is also shown in Fig. 6 where some contours are plotted for p', q, e and excess pore pressure u. These contour plots correspond to an axial strain level determined from the movement of the platens of $\varepsilon_1 = 0{\cdot}05$.

CONCLUSIONS

Some predictions of non-homogeneous behaviour in triaxial specimens of clay have been discussed. Only those which arise due to the effects of a finite permeability, a finite loading rate and migration of pore water within and from the specimen have been considered. The effects of rough end platens and unstable yielding have not been considered. It has been demonstrated that the modified Cam clay soil model, when used together with a coupled Biot-type of consolidation analysis and the finite element numerical technique, is capable of making reasonable predictions of non-homogeneous behaviour of a normally consolidated clay in triaxial compression.

ACKNOWLEDGEMENTS

The Author acknowledges the value of discussions with Professor C. P. Wroth and thanks K. G. Mills for his review of the manuscript.

REFERENCES

Bishop, S. W. & Henkel, D. J. (1962). *The measurement of soil properties in the triaxial test*, 2nd edn. London: Edward Arnold.

Gibson, R. E. & Henkel, D. J. (1954). Influence of duration of tests at constant rate of strain on measured 'drained' strength. *Géotechnique* **4**, No. 1, 6–15.

Henkel, D. J. (1959). The relationships between the strength, pore water pressure and volume change characteristics of saturated clays. *Géotechnique* **9**, No. 2, 119–135.

Roscoe, K. H. & Burland, J. B. (1968). On the generalised stress–strain behaviour of 'wet' clay. In *Engineering plasticity* (ed. J. Heyman and F. A. Leckie), pp. 535–609. Cambridge: University Press.

Schofield, A. N. & Wroth, C. P. (1968). *Critical state soil mechanics*. London: McGraw-Hill.

Small, J. C., Booker, J. R. & Davis, E. H. (1976). Elastoplastic consolidation of soil. *Int. J. Solids Structs* **12**, 431–448.