EXPERIMENT FEST

HANDBOOK
PHYSICS

THE UNIVERSITY OF
NEWCASTLE
AUSTRALIA

newcastle.edu.au/experimentfest

INTRODUCTION

Experiment Fest is an experiment program designed to provide enriching educational experiences for senior high school students who are studying Physics, Chemistry, Biology, Earth and Environmental Science, and Food Science.

Experiment Fest is supported by the University of Newcastle's College of Engineering, Science and Environment, and takes place at both the Callaghan and Ourimbah (Central Coast) campuses of the University of Newcastle.

All experiments are complemented by notes, follow-up discussions and questions to enhance your learning experience.

CONTENTS

2 Introduction
3 Welcome
4 Studying Physics
6 Charged Particles in Electric and Magnetic Fields
10 The Photoelectric Effect
14 Projectile Motion - Uniformly Accelerated Motion in Two Spacial Dimensions
16 Hydrogen Spectrum Analysis
21 Michelson-Moreley Experiment

WELCOME

Welcome to the College of Engineering, Science and Environment at the University of Newcastle.

Experiment Fest is a wonderful chance to give you practical experience which complements your classroom learning while giving you a first-hand look at University life and facilities. Science is an exciting field of study, allowing you to move with the times and contribute actively and responsibly to society. There are many education opportunities in science after high school. Here in the College we provide study and research programs in fast-moving modern fields that make our world work.

The College staff and students who will be taking you through the experiments today are involved in contemporary science research. Please ask questions and utilise your time with them.

Take this day to enjoy being out of the classroom, exploring science with fellow students and participating in valuable experiments and discussions which will help you in your HSC and beyond.

I wish you well in your studies. I hope you apply yourselves to the learning process with enthusiasm and you enjoy your time at the University. We hope to see you studying with us in the future!

Best wishes,

Professor Craig Simmons

Pro Vice-Chancellor
College of Engineering, Science and Environment
The University of Newcastle

STUDYING PHYSICS

WHY STUDY PHYSICS?

Physics is crucial to understanding the world around us, the world inside us, and the world beyond us. It is the most basic and fundamental science. Physics challenges our imaginations with concepts like relativity and string theory, and it leads to great discoveries, like computers and lasers, that change our lives. Physics encompasses the study of the universe from the largest galaxies to the smallest subatomic particles. Moreover, it's the basis of many other sciences, including chemistry, oceanography, seismology, and astronomy. All are easily accessible with a bachelor's degree in physics.

The importance of physics isn't limited to the "hard sciences." Increasingly, physicists are turning their talents to molecular biology, biochemistry, and biology itself. Even medicine has a niche for physicists, and since medical physicists are hard to come by, they are much in demand.

Physics also supports many new technologies. Cell phones, the Internet, and MRIs are only a few examples of the physics-based technological developments that have revolutionized our world.

A physics education equips a person to work in many different and interesting places in industrial and government labs, on college campuses, and in the astronaut corps. Many theoretical and experimental physicists work as engineers, and many engineers have physics degrees.

In addition, many physics grads leave the lab behind and work at newspapers and magazines, in governmental departments—places where their problem-solving abilities and analytical skills are great assets.

Physics is interesting, relevant, and it can prepare you for great jobs in a wide variety of places.

OPPORTUNITIES FOR FURTHER STUDIES IN PHYSICS

The Bachelor of Science degree program at the University of Newcastle provides a foundation of knowledge, skills and attributes that allows graduates to be employable not just today but into the future and to contribute actively and responsibly to society.

Majoring in Physics, you have the opportunity to sample and/or specialise in any one of the following:

- Biophysics
- Computational Physics
- Geophysics
- Medical Physics
- Nanotechnology
- Optical Physics
- Research Physics
- Space Physics/Radar/Surveillance
- Laser Engineering/Photonics Engineering

RESEARCH IN PHYSICS AT THE UNIVERSITY OF NEWCASTLE

There are various groups here at the University which are committed to research in physics. Groups include:

- Centre for Space Physics
- Medical Physics Group
- Surface and Nanoscience Group
- Research Centre for Organic Electronics
- Research Centre for Advanced Fluids

CAREERS IN PHYSICS

The College of Engineering, Science and Environment care about our students and are interested in giving as much direction as possible to those making career choices and beyond.

The possible career paths listed below include a range of opportunities for graduates at degree, honours, and post graduate study levels.

- Acoustical Physicist
- Astronomer/ Astrophysicist
- Biophysicist
- Cosmologist
- Fluid Dynamics Analyst
- Geophysicist
- Graduate Trainee
- Health Physicist
- Laboratory Analyst
- Laboratory/Research Assistant
- Nanotechnologist
- Nuclear Physicist
- Optical Physicist
- Plasma Physicist
- Research Scientist
- Risk Analyst
- Science Information/ Education Officer
- Science/ Physics Teacher
- Science Technician
- Scientific Patent Attorney/ Technical Advisor
- Scientific Policy Officer
- Scientific Writer
- Software Engineer/ Tester
- University Lecturer/ Academic

For more information on the College of Engineering, Science and Environment, check out our website:

newcastle.edu.au/college/engineering-science-environment

For more information on our degrees visit:

newcastle.edu.au/study

FOR MORE INFORMATION VISIT NEWCASTLE.EDU.AU

EXPERIMENT 1: CHARGED PARTICLES IN ELECTRIC AND MAGNETIC FIELDS

EXTRACT FROM HSC SYLLABUS

- Investigate and quantitatively derive and analyse the interaction between charged particles and uniform electric fields, including: (ACSPH083)

  – electric field between parallel charged plates $E = \frac{V}{d}$

  – acceleration of charged particles by the electric field $\vec{F}_{\text{net}} = m\vec{a}, \vec{F} = q\vec{E}$

- Analyse the interaction between charged particles and uniform magnetic fields, including: (ACSPH083)

  – acceleration, perpendicular to the field, of charged particles

  – the force on the charge $F = qv_{\perp}B = qvB\sin\theta$

KEY WORDS

- Magnetic and electric fields
- Helmholtz coils
- Electron gun
- Deflection plates
- Circular
- Motion
- Electric charge

INTRODUCTION

During the 1800s it was believed that the atom (Greek word meaning indivisible) was the fundamental particle of all matter. In the mid 1800s W. Crookes (UK, 1832-1919) invented the equipment that allowed scientists to investigate 'cathode rays'. The Crookes tube or discharge tube consists of a glass tube containing a pair of separated metal plates or electrodes. The electrodes were named the anode and the cathode. The experiments involved applying a large voltage to the plates and investigating the properties of the 'rays' in the tube as a function of gas pressure etc.

What are Cathode Rays?

This was investigated by J.J Thomson (UK, 1856-1940) in 1897. There are 3 famous physicists named 'Thomson'.

1. William Thomson (1824-1907); Also known as Lord Kelvin, known for the absolute temperature scale.
2. Joseph J. Thomson (1856-1940); our guy, discovery of the electron, proposed a 'plum pudding' atomic model.
3. George P. Thomson (1892-1975); Son of J.J Thomson, diffraction of electrons to prove wave nature.

Using the observed effects of electric and magnetic fields on the cathode rays, J.J. Thomson estimated the charge/ mass ratio. From the results of Faraday's (UK, 1791-1867) Law of Electrolysis, Thomson was able to estimate that cathode rays consisted of negatively charged particles that were about 1800 times lighter than hydrogen. Robert Millikan more precisely measured the electron charge in 1909.

Effect of the Electric Field

A voltage, V, is applied across the deflection plates in an evacuated tube, separated by a distance d. If the electric field is assumed to be uniform, then the expression/equation for the electric field, E, in terms of V and d, is

$E =$ (1)

and the electrons, with charge e, experience a force given by

$F =$ (2)

The electron beam is made visible by collisions with the screen.

a) On the diagram below (between the red and black plates) sketch the curve traced out on the screen by the path of an electron after it enters the electric field.

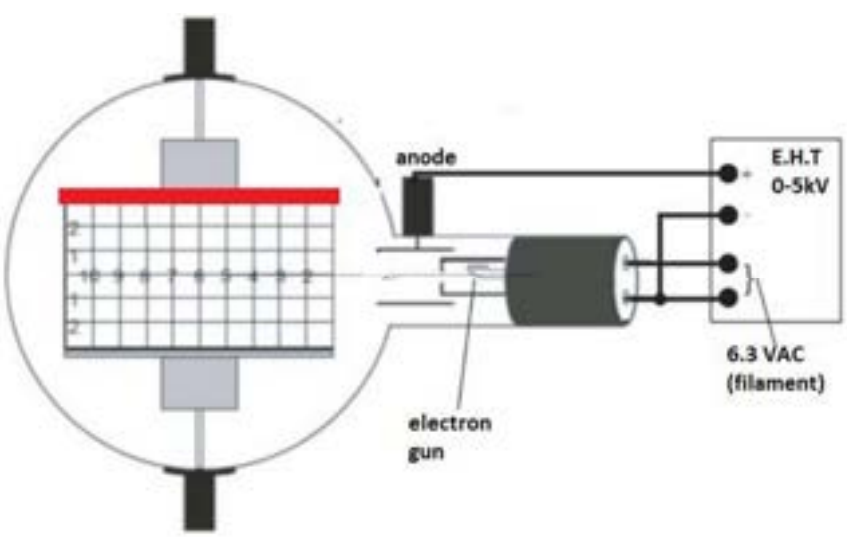

Effect of the Magnetic Field

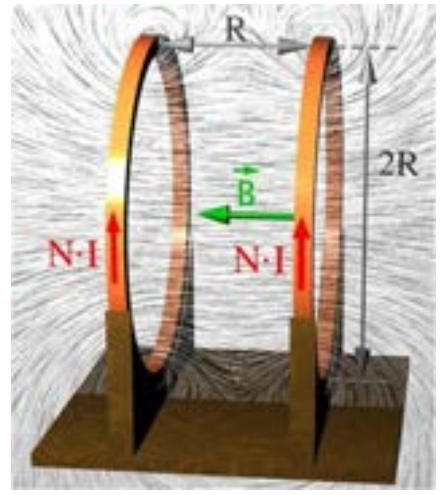

The magnetic field is generated by a Helmholtz coil arrangement (Figure to the right). The *B* field (green arrow) generated by the coils carrying a current (red arrows) is relatively uniform between the coils. In our apparatus (Figure below) the B field is perpendicular to the plane of the screen.

a) If the magnetic field causes the electrons to bend down, as in Figure A (below right), in what direction is the magnetic field?

What is the angle between the *B* field and the electron velocity?

b) So in the *B* field, the electrons experience a force given by the formula

$F =$ (3)

c) This centripetal force causes the beam to undergo uniform circular motion. The radius of curvature of the circle, *R*, is given by

$$R = \frac{(x^2 + y^2)}{(2y)} \quad (4)$$

where *y* is the vertical distance the beam drops over a horizontal distance *x*. Both *x* and *y* can be measured from the grid scale on the tube.

R is related to the electron mass, *m*, and charge, *e*, by

$$R = \frac{m\,v}{e\,B} \quad (5)$$

THE EXPERIMENT

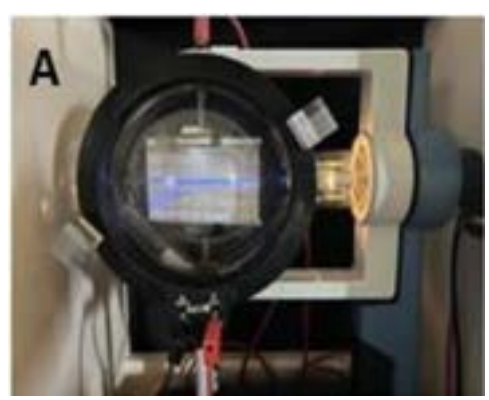

A. Estimate the deflection plate separation, *d*, from the grid scale. This is the value for *d*.

d = m

B. Set the voltage on the plates to V = 2000 volts. This also sets the energy of the electrons to 2000eV. This will cause the beam to bend upwards.

V = volts

C. Calculate the value of the electric field E using equation 1.

E = Vm^{-1}

D. Increase the current to the coils until the beam flattens out. This will not look exactly like Fig D below, but the beam will bend down slightly then come up to intersect the horizontal line at the end of the grid. At this point the forces from the electric (eqn 2) and magnetic fields (eqn 3) acting on the cathode ray beam, are equal.

$$F_{\text{Electric Field}} = F_{\text{Magnetic Field}}$$

or,

$$E\,q = B\,q\,v$$

Now rearranging for v $\quad v = E/B \quad$ (6)

Combining equations 5 and 6 we have $\quad \frac{e}{m} = \frac{E}{B^2 R} \quad$ (7)

E. Measure the current flowing in the coils, I. For this Helmholtz coil the magnetic field can be calculated using the formula

$B = 0.00423\,I$

F. Now turn off the voltage to the deflection plates. The beam will bend down again as in Fig B. Use the grid and equation 4 to determine a value for R.

Use equation 7 and your values of R, B and E to determine the charge/mass ratio for a cathode ray particle.

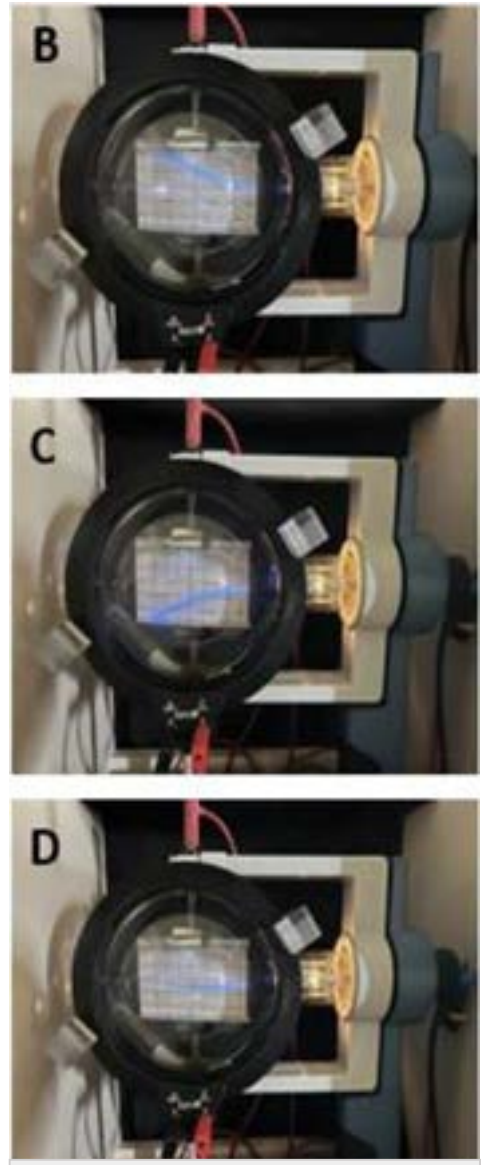

Figure: (A) With no electric field or magnetic field applied there is no change in the beam.

(B) With the electric field applied, the beam bends up.

(C) With just a magnetic field applied, the beam bends down.

(D) With both the magnetic field and electric field applied, the beam can be balanced.

G. The accepted value for e/m for an electron is 1.76×10^{11} Ckg^{-1}. Does your measured value agree with the accepted value to within experimental error?

EXPERIMENT 2: THE PHOTOELECTRIC EFFECT

EXTRACT FROM HSC SYLLABUS

Inquiry question: What evidence supports the particle model of light and what are the implications of this evidence for the development of the quantum model of light?

- Investigate the evidence from photoelectric effect investigations that demonstrated inconsistency with the wave model for light (ACSPH087, ACSPH123, ACSPH137)

- Analyse the photoelectric effect $K_{\max} = hf - \phi$ as it occurs in metallic elements by applying the law of conservation of energy and the photon model of light, (ACSPH119)

Solve problems, analyse information and identify the relationship between photon energy, frequency, speed of light and wavelength.

INTRODUCTION

When light shines on a metal surface, electrons are ejected if the frequency (energy) of the light is above the Threshold Frequency (Work Function) of the metal. The energy carried away by each electron depends on the frequency but not on the intensity of light. Therefore, light can be a stream of particles (photons) rather than a wave.

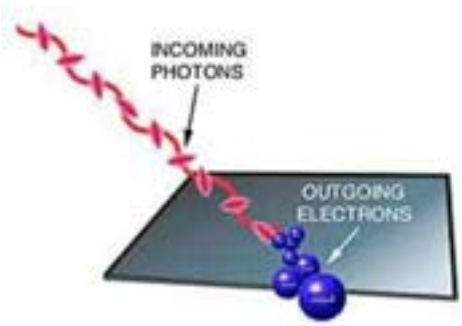

The emitted electrons have a range of kinetic energies. The electrons with maximum kinetic energy are emitted from right at the surface after having received all the energy, *E*, from the photon. However, in leaving the surface the electrons lose an amount of energy ϕ (called the workfunction of the surface).

a) Read the above section and write down an expression for the maximum kinetic energy of the electrons in terms of the photon energy *E* and workfunction ϕ.

$K_{\max}$ = (1)

The energy of a photon is given by $E = hf$, where Planck's constant h is 6.63×10^{-34} Js and f is the frequency of the photon in Hz and $c = f\lambda$ where the speed of light $c = 3.00 \times 10^{8}$ m s^{-1} and the wavelength of the photon is λ.

b) Write down an expression for *E* in terms of λ.

E = (2)

c) Combine (1) and (2) to write down a relation between maximum kinetic energy and λ

$K_{\max} =$ (3)

THE EXPERIMENT

To determine maximum kinetic energy of emitted electrons.

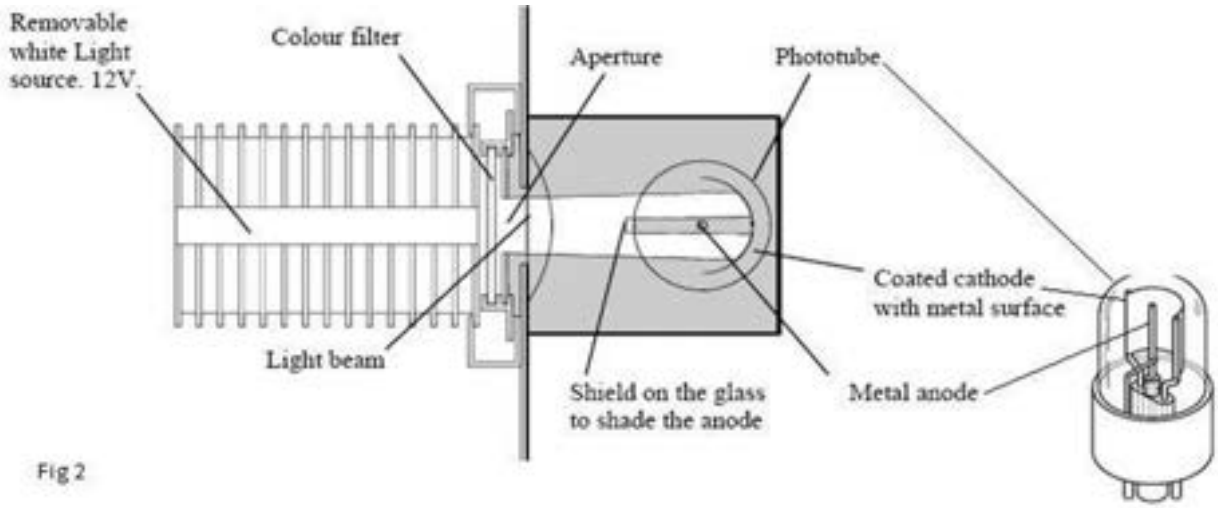

Fig 2

The phototube (Fig 2) is the essential part of the instrument you will use. It is an evacuated glass tube containing a coated electrode (cathode) shaped like half of a cylinder. Another electrode (anode) in the form of a straight rod is positioned at approximately the focal point of the curved surface. When light strikes the cathode surface, electrons are ejected and collected by the anode.

The coloured filters, placed into the light path, cut off all wavelengths above a particular value, therefore the minimum wavelength of light reaching the tube is known. Eqn 3 can then be used to determine the maximum kinetic energy of the emitted electrons. To measure the highest electron energy, we apply a small reverse voltage called the “stopping voltage” (i.e., with anode negative and cathode positive) that is just high enough to completely stop the flow of electrons reaching the anode (zero current).

If the stopping voltage is continued to be increased, the current will begin to flow backwards because electrons begin to flow from the anode to the cathode.

The Experimental Method

1. Have the demonstrator check the equipment. Turn on the light source to illuminate the phototube through the aperture in the rear face of the instrument. Note that the light source will become warm.

2. Insert the blue filter into the wider pair of the slide grooves provided in front of the light source.

3. Select **tube current** on the **meter switch** to monitor the current through the phototube. **Select the 0-20 µA range.**

Fig 3

4. Using the **backing voltage** control, adjust the voltage from zero volts until the current through the tube reduces below **0.1 microamp**.

5. Now select the sensitive **0-200 nA range** and increase the **stopping volts** until the electron flow through the tube is reduced to **0.0 nanoamps**. If the current goes negative reduce the **stopping volts** until **0.0 nanoamps** is achieved. At this point the most energetic electrons are prevented from reaching the anode.

6. Without disturbing anything, select stopping (or backing volts) on the meter switch and observe the exact voltage that is being applied to the phototube in reverse to stop all electrons from reaching the anode. Record this stopping voltage in Table 1.

7. Remove the colour filter and repeat the experiment from steps 3 to 7 for the remaining colour filters.

8. Using the wavelength value marked on the blue filter, calculate the frequency (in Hertz) of the light transmitted by this filter and enter it into Table 1. Record your measurements of stopping voltage in Table 1.

9. Plot a graph of the frequency in Hz (X axis) against the stopping volts (Y axis) using the supplied graph paper.

TABLE 1

Filter	Min Wavelength (nm)	Max Frequency $f=c/\lambda$ (Hz)	Stopping Volts (V)
blue	462		
yellow	510	5.88×10^{14}	
orange	545	5.50×10^{14}	
red	590	5.08×10^{14}	

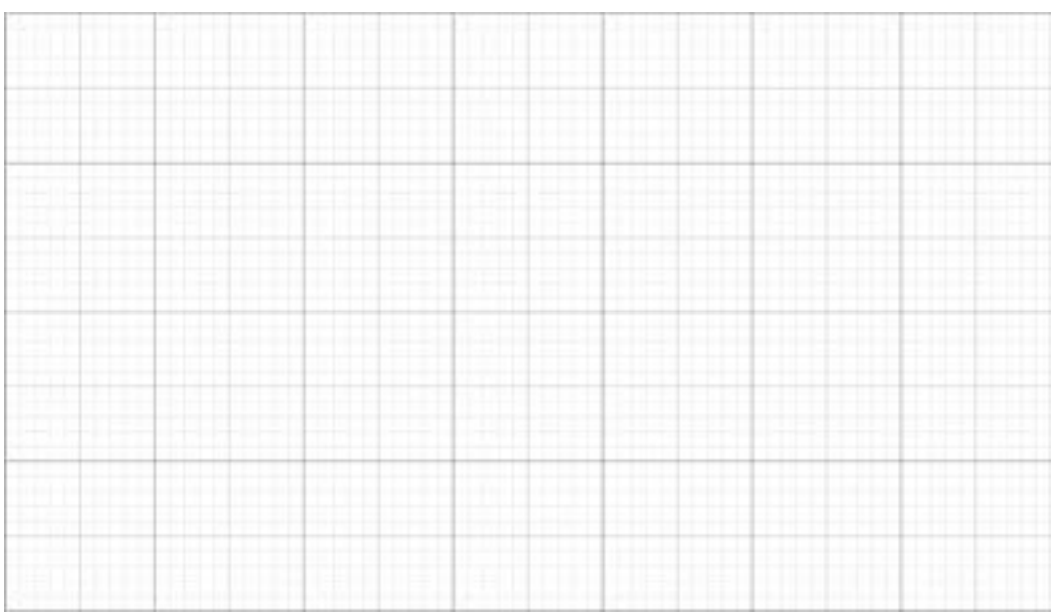

DISCUSSION

The stopping voltage is related to the maximum kinetic energy of the electrons since if the electrons have more energy, it will require a larger voltage to stop them.

So which colour light generates electrons with the highest kinetic energy?

Which colour light generates electrons with the lowest kinetic energy?

Is this expected from equation 3?

What can we say about the slope of the line in this graph?

The intercept on the Y axis is related to the workfunction of the cathode. Using eqn 1, determine the workfunction of the cathode in eV.

Look up a list of workfunctions to see if you can determine what the metal cathode surface most likely made from?

EXTENSION

With the red filter selected, place an aperture in the light path to reduce the intensity of light. Does this markedly change the stopping volts? Is this result expected?

EXPERIMENT 3: PROJECTILE MOTION - UNIFORMLY ACCELERATED MOTION IN TWO SPACIAL DIMENSIONS

EXTRACT FROM HSC SYLLABUS

Inquiry question: How can models that are used to explain projectile motion be used to analyse and make predictions?

Students:

- Analyse the motion of projectiles by resolving the motion into horizontal and vertical components, making the following assumptions:
  - a constant vertical acceleration due to gravity
  - zero air resistance

- Apply the modelling of projectile motion to quantitatively derive the relationships between the following variables:
  - initial velocity
  - launch angle
  - maximum height
  - time of flight
  - final velocity
  - launch height
  - horizontal range of the projectile (ACSPH099)

- Conduct a practical investigation to collect primary data to validate the relationships derived above

INTRODUCTION

In physics we are interested in describing motion so that we can predict where things will end up. Usually, study of motion in physics begins by considering distance and speed where

$$\textbf{Distance} = \textbf{speed} \times \textbf{time} \tag{1}$$

for a constant speed. You can check this works by considering the units we typically use for speed! Speed is a scalar quantity (it only has a size or magnitude). If we give the speed a direction as well as a magnitude then we make a vector quantity called *velocity*. Distance is a scalar while *displacement* is a vector quantity. If an object accelerates uniformly with acceleration *a* from an initial velocity *u* then the distance travelled in a time *t* is

$$\textbf{Distance} = \boldsymbol{u\,t} + \frac{1}{2}\,\boldsymbol{a\,t^2} \tag{2}$$

Projectile motion is viewed in two dimensions as the combination of two component motions, one in the horizontal, the *x* direction, and the other in the vertical or the *y* direction. Gravity provides a force only in the vertical direction. Horizontal and vertical components are usually combined using trigonometry.

The vector components require the use of positive (+) and negative (-) signs to show the direction of travel. Arbitrarily we chose a positive (+) sign for motion in an upward or vertical direction and a minus (-) sign for motion in the downwards or horizontal direction.

For motion in the real world (with vertical gravity) equations 1 and 2 become:

$$\Delta x = u_x \, t \tag{3}$$

$$\Delta y = u_y \, t + \frac{1}{2} \, a \, t^2 \tag{4}$$

THE EXPERIMENT

Use the above equations and the equipment provided (your demonstrator will explain how it all works) to design your own investigation in order to determine the initial velocity at the mouth of the cannon. Given that this initial velocity is your goal, discuss what method you might use, using the provided apparatus, and which calculations you might need to perform to obtain the initial velocity, v_0. (hint: to find v_0 you will likely need to determine v_{0x} and v_{0y} and then recombine them to find v_0.)

If you have any questions or concerns ask your demonstrator or teacher before proceeding.

You can then test your calculated value using the provided photogate to see how well you did!

EXPERIMENT 4: HYDROGEN SPECTRUM ANALYSIS

EXTRACT FROM HSC SYLLABUS

Inquiry question: How is it known that classical physics cannot explain the properties of the atom?

Students:

- Investigate the line emission spectra to examine the Balmer series in hydrogen (ACSPH138)
- Relate qualitatively and quantitatively the quantised energy levels of the hydrogen atom and the law of conservation of energy to the line emission spectrum of hydrogen using:

$$E = hf$$

$$E = \frac{hc}{\lambda}$$

$$\frac{1}{\lambda} = R\left[\frac{1}{n_f^2} - \frac{1}{n_i^2}\right]$$

Inquiry question: What is light?

- Conduct an investigation to examine a variety of spectra produced by discharge tubes, reflected sunlight or incandescent filaments.

INTRODUCTION

The Bohr Model of Hydrogen

Bohr's atomic model helps us explain the line emission spectra from atoms such as hydrogen. If a large enough voltage is applied across a gas discharge tube an electrical current can flow through the gas, and it will emit light with a colour that is characteristic of the gas. If the emitted light is analysed by a spectrometer, a series of discrete lines are observed. Each line corresponds to a different wavelength of the emitted light. The simplest line spectrum comes from atomic hydrogen and this will be observed in this experiment. See Figure 1 below.

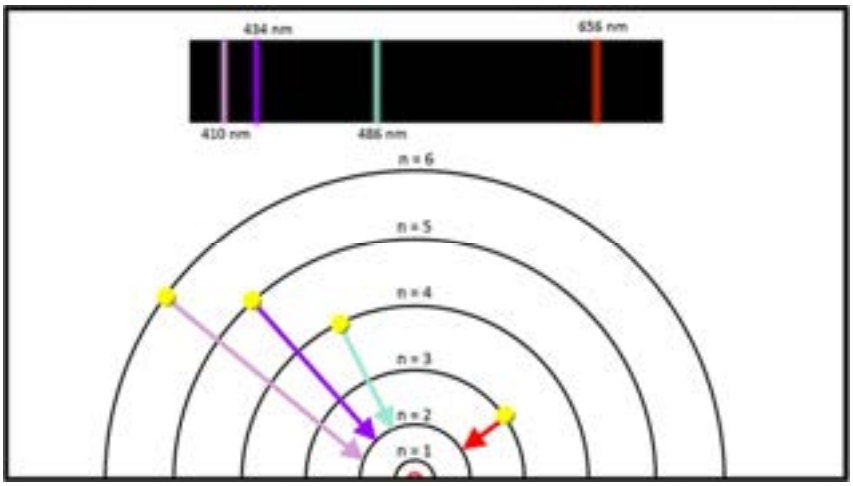

FIGURE 1: BOHR MODEL OF HYDROGEN SHOWING THE ELECTRON TRANSITION THAT PRODUCE THE EMISSION LINES IN THE BALMER SERIES. THE DIFFERENCE IN ENERGY BETWEEN ATOMIC ORBITS GIVES US THE WAVELENGTH OF THE EMITTED LIGHT FROM $E = \frac{hc}{\lambda}$

Balmer Series

The line spectrum of hydrogen includes four prominent lines in the visible part of the spectrum. In 1885, Joseph Balmer found that the wavelengths (λ) of these lines *(the Balmer series)* could be described by the empirical equation:

$$\frac{1}{\lambda} = R\left[\frac{1}{n_{final}^2} - \frac{1}{n_{initial}^2}\right] \qquad (1)$$

Where: R is the Rydberg's constant 1.0973 X 10^7 m^{-1}.

n_{final} is the energy level that the electron transitions to, which for the Balmer series, $n_{final} = 2$

$n_{initial}$ is the energy level that the electron has been excited to. For the Balmer series,

n_{intial} = 3, 4, 5 and 6

Spectrometer

Today the line spectra of hydrogen will be determined using the experimental setup shown in Figure 2. The incident light from the source is collimated, then diffracted by a transmission diffraction grating and viewed through a telescope.

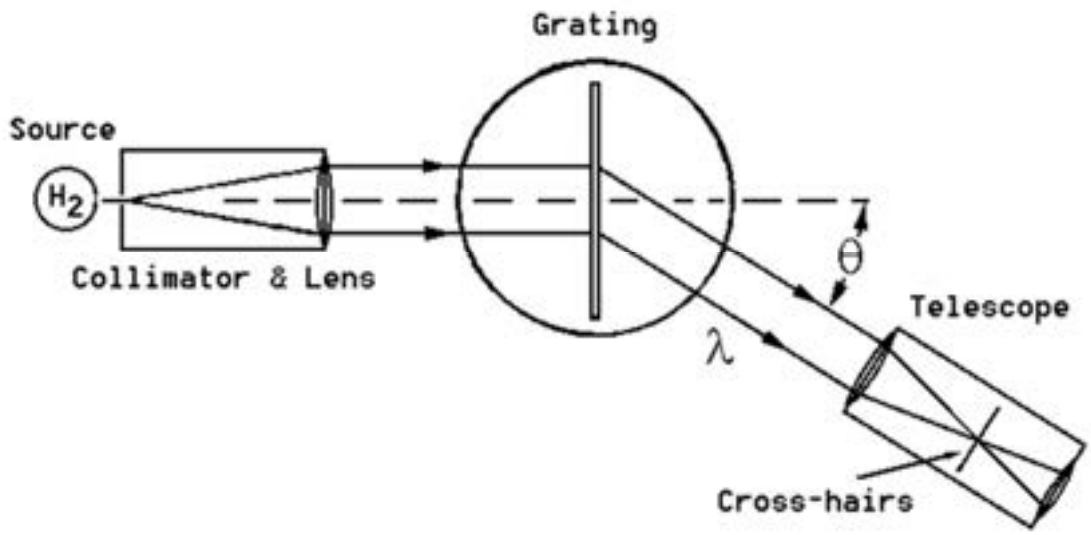

FIGURE 2: SPECTROMETER SETUP

The condition for constructive interference for normal incidence gives us the following equation

$$d \sin \theta = m\lambda \qquad (2)$$

Where: d is the line spacing for the diffraction grating.

θ is the the angle from the straight through position.

λ is corresponding wavelength of the energy level being observed.

m^{th} spectral order.

THE EXPERIMENT

The diffraction grating used in today's spectrometer has 1200 lines per 1mm or 1200000 lines per meter. The distance between lines, "d " can be calculated by dividing 1 metre by the number of lines in that meter, therefore d =8.33X10^{-7} m or 833 nm

You will fill out Table 1 as you progress through the experimental procedure.

Colour	$n_{initial}$ (Unitless)	λ Balmer (nm)	θ *Right* *(Degrees)*	θ *Left* *(Degrees)*	θ *diffracted* *(Degrees)*	Sin(θ *diffracted*) (Unitless)	λ Spectroscope (nm)
Red							
Blue		486.1					
Purple		434					434
Violet		410.2					410.2
_____							

TABLE 1: CALCULATIONS OF THE VISIBLE SPECTRA OF HYDROGEN

1. Fill in the column labelled $n_{initial}$ for the Balmer series initial excited energy levels by referring to Figure 1.

2. Using Balmer Eq 1, calculate the third excited energy level transition (n_3 or red line) wavelength and record in Table 1.

3. Now rotate the telescope to the right (anti-clockwise) until you find the red line. You will need to rotate it about 50°. When you have found the red line put the cross hairs in the middle. Let the rest of your group have a look. Read the angle as described below and record in Table 1 column $\theta_{Right.}$
   - Lift the black cloth on the right side and take the measurement of the angle. Use the magnifying glass to read the angle.
   - There is a button on the side of the magnifying glass, which turns the light on.
   - The upper scale is in half a degree increment.
   - The reading is taken from where the lower scale 0 line matches up to the upper scale. Figure 3 shows an example of how to take angle reading.
   - Let all your group read the angle to check that it is correct.

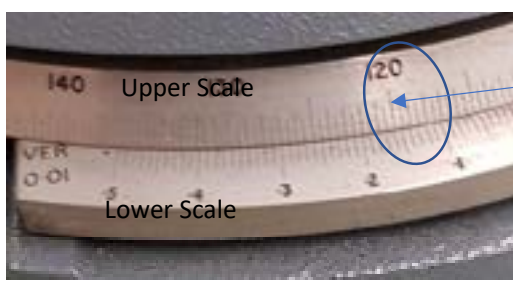

The zero on the lower scale is 2 × 1° lines plus a half degree line from the 110° line on the upper scale, giving a reading of 112.5°.

FIGURE 3: SPECTROMETER SCALE FOR READING THE MICROSCOPE ANGLE.

4. Move the telescope back towards the straight through position until you see the blue line. This will be about 15° back from the red line. Let the rest of your group observe the band and record the angle in Table 1.

5. Again, move the telescope until you see the purple line. This is hard to see.

6. Repeat steps 4 to 6 by rotating on the left side (clockwise). This is to account for the misalignment of the diffraction grating. Now fill out the column θ_{Left}

7. Complete column diffracted angle $\theta_{diffracted}$ by subtracting θ_{Left} from θ_{Right} and divide by 2

$$\theta_{diffracted} = \frac{\theta_{Right} - \theta_{Left}}{2}$$

8. Calculate the Sine of the diffracted angle, Sin($\theta_{Diffracted}$) and fill in Table 1

9. To calculate $\lambda_{Spectroscope}$ multiply Sin($\theta_{Diffracted}$) by d = 833 nm. Only the 1st order spectra has been observed so m =1.

USING A MODERN SPECTROMETER

The demonstrator will now show you a hydrogen spectrum from a commercial spectrometer USB4000 to demonstrate some of the limitations of the Bohr's and Rutherford's classical atomic model of Hydrogen.

List some of the Limitations of the classical model of the hydrogen atom.

Number	Classical model Limitations
1	
2	
3	
4	
5	

REFERENCES

https://cnx.org/contents/Ax2o07Ul@16.4:mirSSr3Q@13/30-3-Bohr-s-Theory-of-the-Hydrogen-Atom

https://www.pascalpress.com.au/content/freeresources/downloads/hsc/Year%2012_Physics_Passcards_Digital_Press_Rev.pdf

Get the results you want: Year 12 Physics, Mark Butler, Pascal Press, ISBN 978-1-74125-678-9, (2019).

EXPERIMENT 5: MICHELSON-MORELEY EXPERIMENT

EXTRACT FROM HSC SYLLABUS

Students:

- Analyse and evaluate the evidence confirming or denying Einstein's two postulates:
  - the speed of light in a vacuum is an absolute constant
  - all inertial frames of reference are equivalent (ACSPH131)

- Conduct investigations of historical and contemporary methods used to determine the speed of light and its current relationship to the measurement of time and distance (ACSPH082)

INTRODUCTION

What is the nature of light?

Around 1800 it was thought that light was a wave because it produced interference and diffraction patterns. Michelson's (in 1879) calculated the speed of light, using an arc lamp and rotating mirrors, to be 299,901 kilometres per hour. Like waves travelling through water, it was thought that light must be similarly travelling in some mysterious material, which was called the aether, surrounding and permeating everything even space. Since light travels so fast, the aether must be very light and very hard to compress. It must also allow solid bodies to pass through it freely, without ether resistance, or the planets would be slowing down.

How could the Aether be detected?

Suppose we have a river of width w (say, 100 units), and two swimmers who both swim at the same speed, (say, 5 units per second). The river is flowing at a steady rate, say 3 units per second. The swimmers race in the following way: they both start at the same point on one bank. One (Rachel) swims directly across the river to the closest point on the opposite bank, then turns around and swims back. The other (Bob) stays on one side of the river, swimming upstream a distance (measured along the bank) exactly equal to the width of the river, then swims back to the start. Who wins?

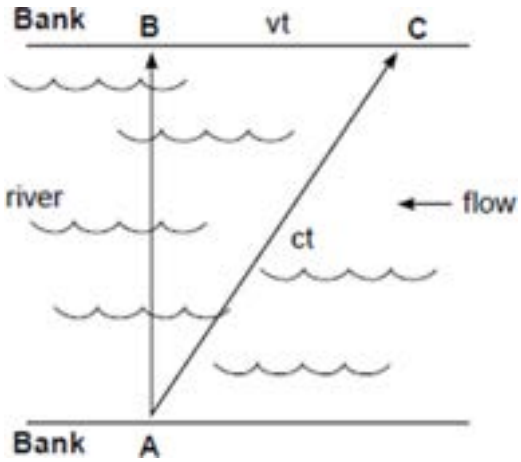

Let's consider Bob who goes upstream and back. Going 100 units upstream, the speed relative to the bank is only 2 units per second, so that takes 50 seconds. Coming back, the speed is 8 units per second, so it takes 12.5 seconds, for a total time of 62.5 seconds.

Now Rachel goes across the flow which is little trickier. To succeed in going directly across, Rachel must actually aim upstream from point A towards point C at the correct angle. If the angle is correctly chosen so that the net movement is directly across, in one second Rachel must have moved four units across (see diagram). So, at a crossing rate of 4 units per second, Rachel gets across in 25 seconds, and back in the same time, for a total time of 50 seconds so Rachel wins. This turns out to true whatever their swimming speed. (Of course, the race is only possible if they can A swim faster than the current!)

Michelson thought that just as the speed of sound is relative to the air, so the speed of light must be relative to the aether. So if you could measure the speed of light then you could measure the speed of light travelling upwind, and compare it with the speed of light travelling downwind, and the difference of the two measurements should be twice the windspeed.

THE EXPERIMENT

Light is directed at an angle of 45 degrees at a half-silvered, half transparent mirror, so that half the light goes on through the glass, half is reflected. They both go on to distant mirrors which reflect back to the half-silvered mirror. At this point, the light is again half reflected and half transmitted, but a telescope is placed behind the half-silvered mirror as shown in the figure so that the combined light will arrive in this telescope. Now, if there is an aether wind blowing, someone looking through the telescope should see the effect of a slightly longer time for the 2 light beams to arrive, since one would have gone more upstream and back, one more across stream in general.

Taking the speed of light to be c relative to the aether, and the ether to be flowing at v:

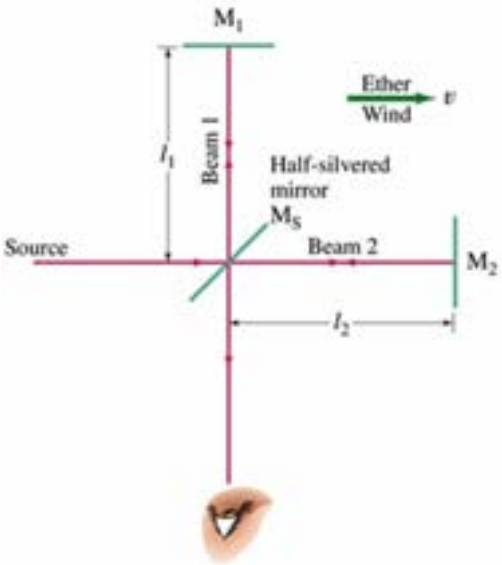

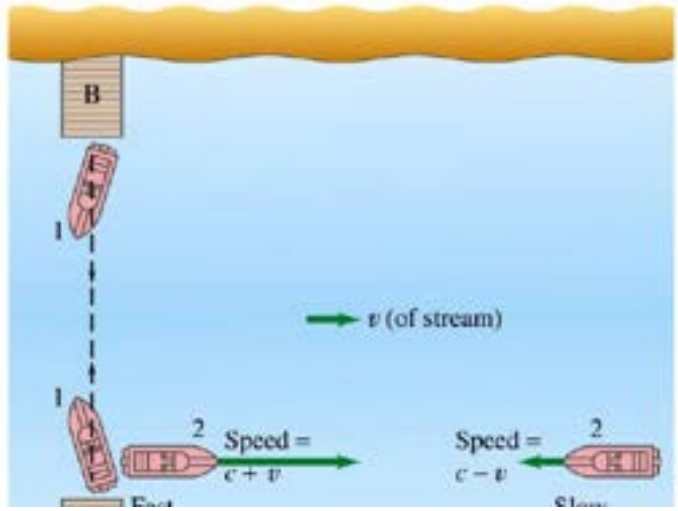

to go a distance l upstream will take $l/(c-v)$ seconds and l downstream will take $l/(c+v)$ seconds, therefore the total roundtrip takes $2l/(c\ (1-\ v^2/c^2))$ seconds.

We can safely assume the speed of the aether is much less than the speed of light, otherwise it would have been noticed long ago, for example in timing of eclipses of Jupiter's satellites.

This means v^2/c^2 is a small number so we approximate the roundtrip time to go upstream and downstream to be $(2l/c)(1+v^2/c^2)$. From Pythagoras' theorem, the cross-stream speed is $\sqrt{(c^2-v^2)}$. The roundtrip cross-stream time will be $2l/\sqrt{(c^2-v^2)}$. This can be approximated as $(2l/c)(1+v^2/2c^2)$.

The two roundtrip times differ by an amount $l(v^2/c^3)$. Now, $2l/c$ is just the time the light would take if there were no aether wind at all, say, a few millionths of a second. If we take the ether windspeed to be equal to the earth's speed in orbit, then v^2/c^2 is about 1/100,000,000. This means the time delay between the pulses reflected from the different mirrors reaching the telescope is about one-hundred-millionth of a few millionths of a second. It seems completely hopeless that such a short time delay could be detected.

Michelson was the first to figure out how to do it using the interference properties of the light waves. One set of waves goes upstream and downstream, the other goes across stream and back. Finally, they come together into the telescope and the eye. If the one that took longer is half a wavelength behind, its troughs will be on top of the crests of the first wave, they will cancel, and nothing will be seen. If the delay is less than that, there will still be some dimming. However, slight errors in the placement of the mirrors would have the same effect. To maximize the effect, the whole apparatus, including the distant mirrors, was placed on a large turntable so it could be swung around.

Observe how the interference pattern changes as the turntable is rotated through 90 degrees. What happens?

How does this change compare to that expected if there is an aether?

Why was the null result difficult to accept?

Acknowledgement

The University of Newcastle extends sincere gratitude to Orica for financially supporting Experiment Fest through Orica's Community Investment Program. Orica's investment in the future of our region's students, continues to promote the value of education and lifelong learning, fostering a brighter future for all.